Status of Q-BPM / IP-BPM

Y.Honda
2006/May./30
ATF2 meeting

RF measurement of Q-BPM

- Cavity
  - Received 11 BPMs with long tube on 3/24
- Measurement
  - RF measurements were done before/after the cavity tuning procedure at PAL. The plots show distribution of f, QL, Qext and XY-isolation for the 11 BPMs.
    - green: before tuning
    - red: after tuning
  - Same measurements were repeated at KEK (by a Tokyo univ. student), the results were confirmed.

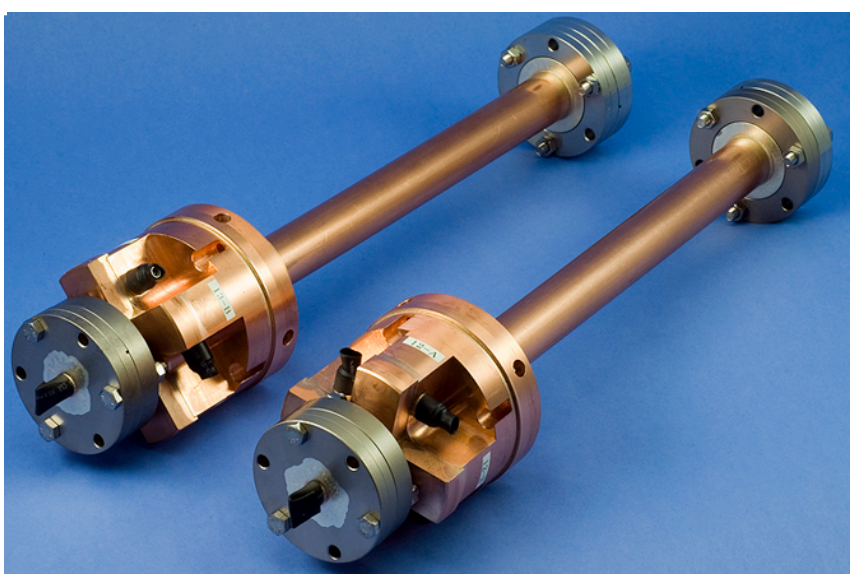

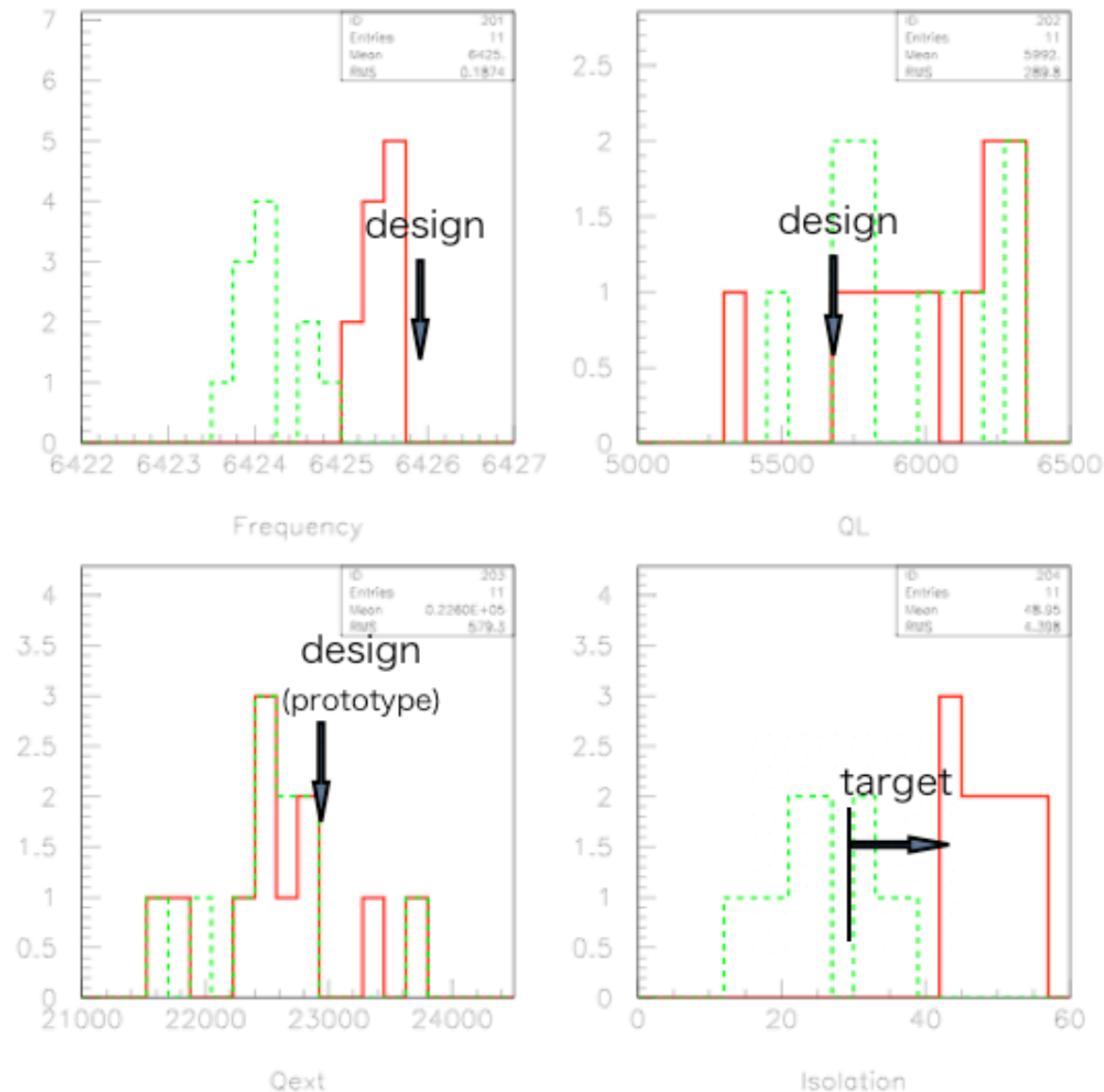

Q-BPM alignment test plan

- Alignment procedure
  - As presented in the 1st meeting.
    - pole tip position is mirrored to the BPM adapter
    - adapter guides the BPM outer surface
    - expected precision: <100um with respect to the mechanical center of the pole tips
- To be checked
  - Magnet's field center has been measured with respect to the reference plate on its top
  - Need to connect the reference plate and mechanical center of pole tips
  - Preparing an alignment target holder shaped as the BPM
    - connect reference plate and actual position of BPM
    - check repeatability, etc.
  -

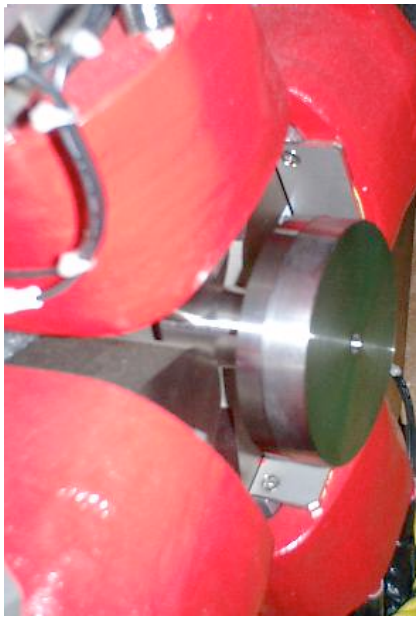

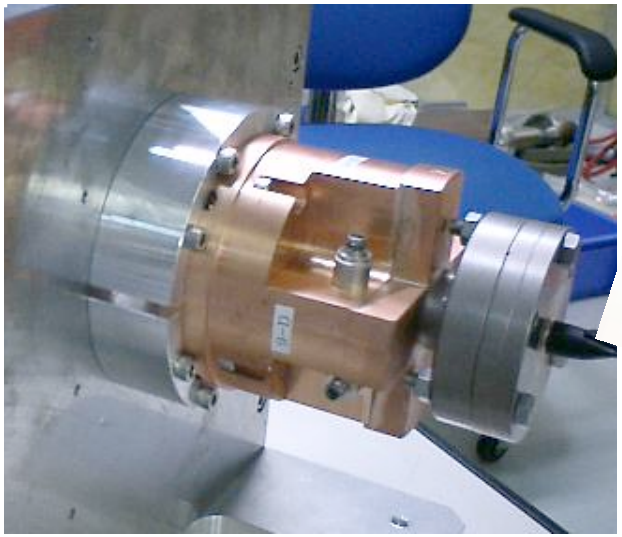

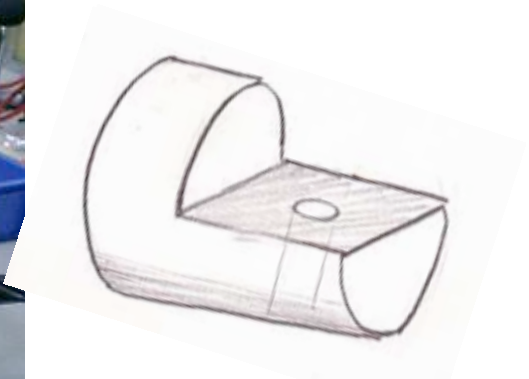

laser alignment target holder
same shape as the BPM

Q-BPM beam test

- Combined test of ATF2 Q-BPM (prototype) and electronics (ver.2 prototype)
  - use only 1 BPM, so not the actual resolution measurement
  - comparing two y-ports, we could estimate resolution limited by electronics and analysis
- Test items
  - confirm required resolution (100nm)
  - resolution v.s. beam offset
    - resolution can be worsened in saturated case

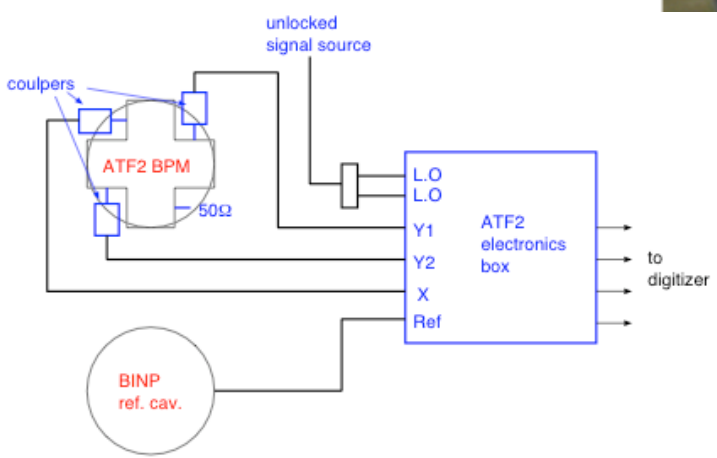

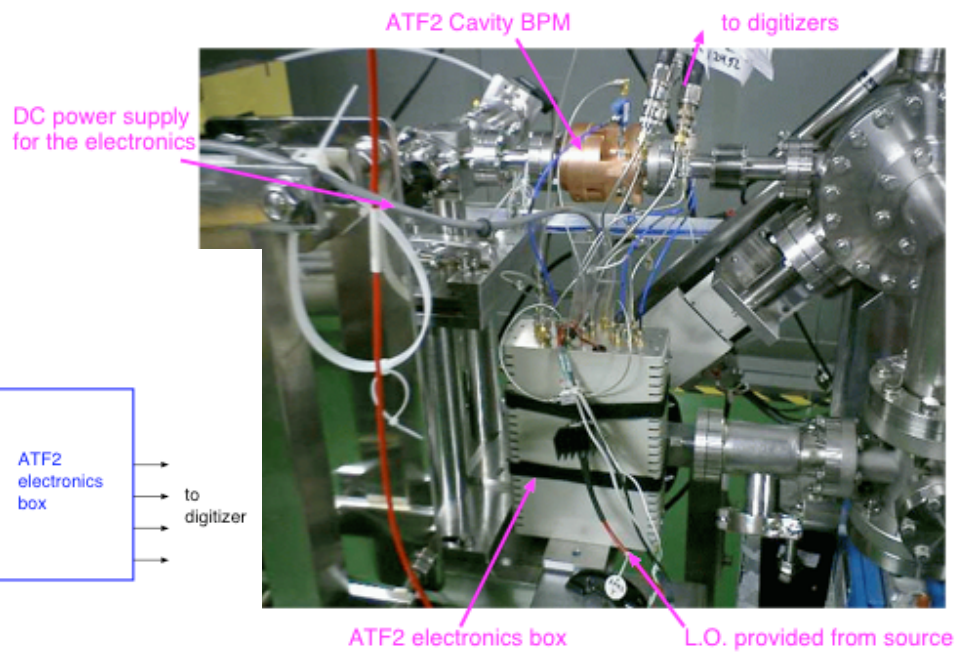

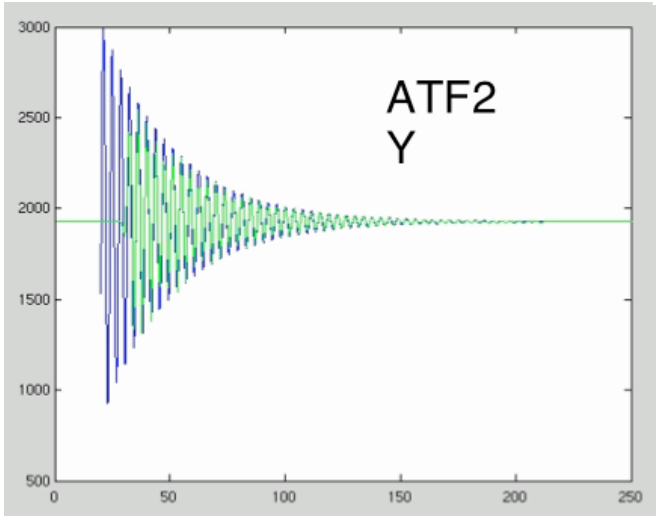

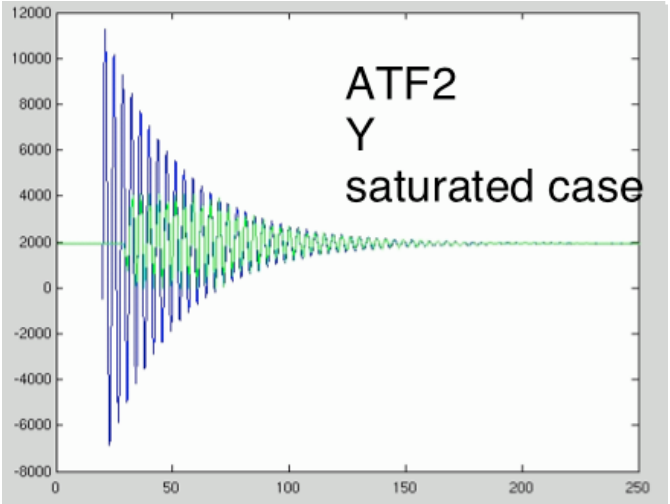

Q-BPM beam test

- 6 sets of beam orbit maximum offset was 250um, signal started to saturate at 100um offset
- Result
  - (rms of Y1-Y2 distribution)/sqrt(2) gives resolution
    - not-saturated case: 130nm resolution
    - saturated case: 1.2um resolution
  - 1/sqrt(2) better resolution can be expected if the two channels were combined
  - overall, the result looks good

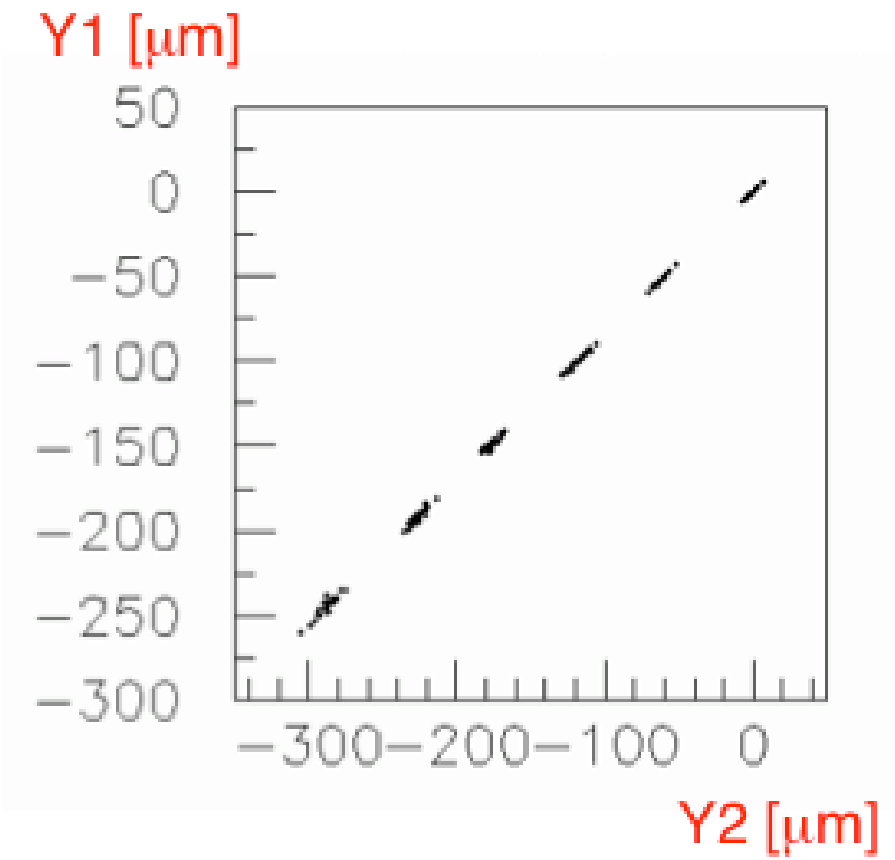

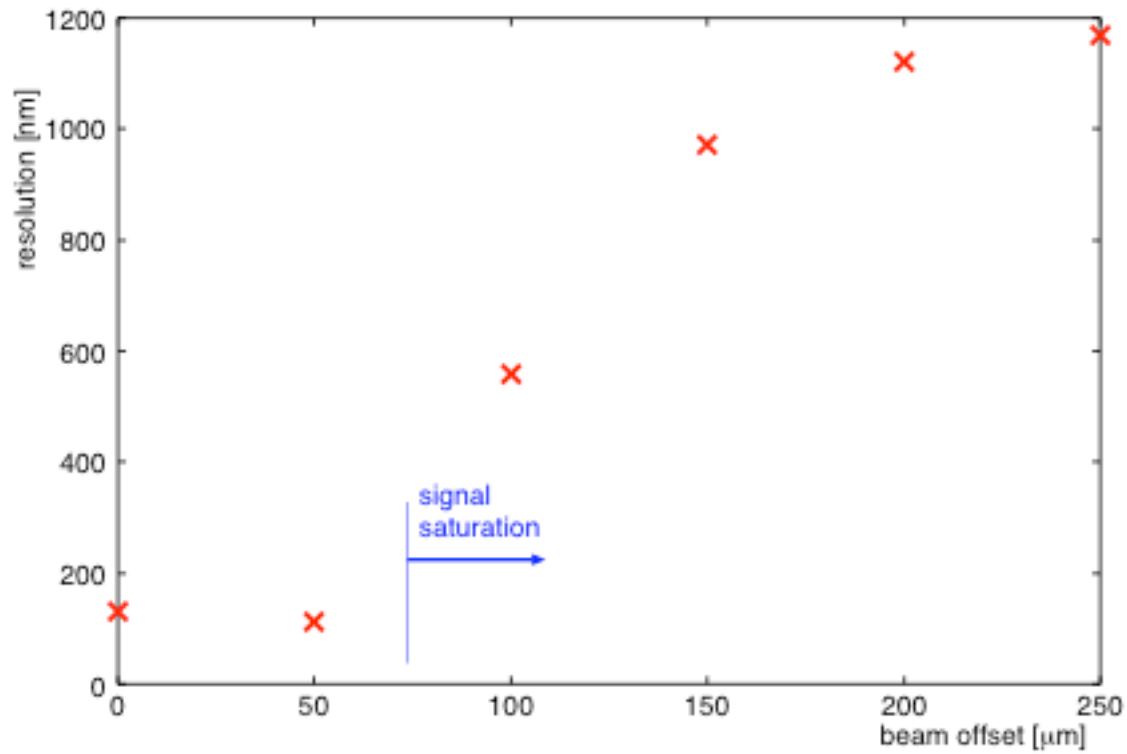

Status of IP-BPM

- First test model
  - 3D geometrical measurement: all satisfies the design, typically within 20um error.
  - frequency: 5.704GHz, 6.420GHz (design: 5.712GHz,6.426GHz)
  - x-y isolation: -40dB without frequency filter, should be much better with the filter
  - interference between the cavities: less than -90dB not detectable
  - Qext of Y-port: 2800 (simulation 2400), reasonable
  - Qext of X-port: 1500 (simulation 3900), waveguide resonance affected.
- Prototype vacuum model
  - modification in wave guide length, frequency adjustment
  - fabrication already started

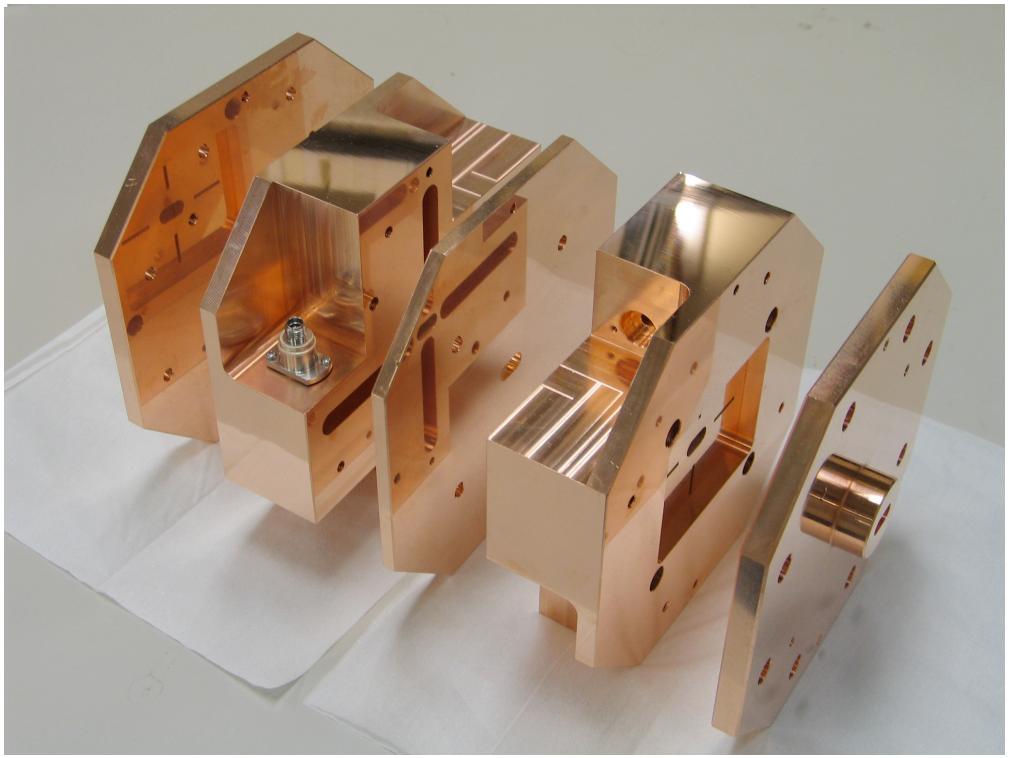

Status of IP-BPM
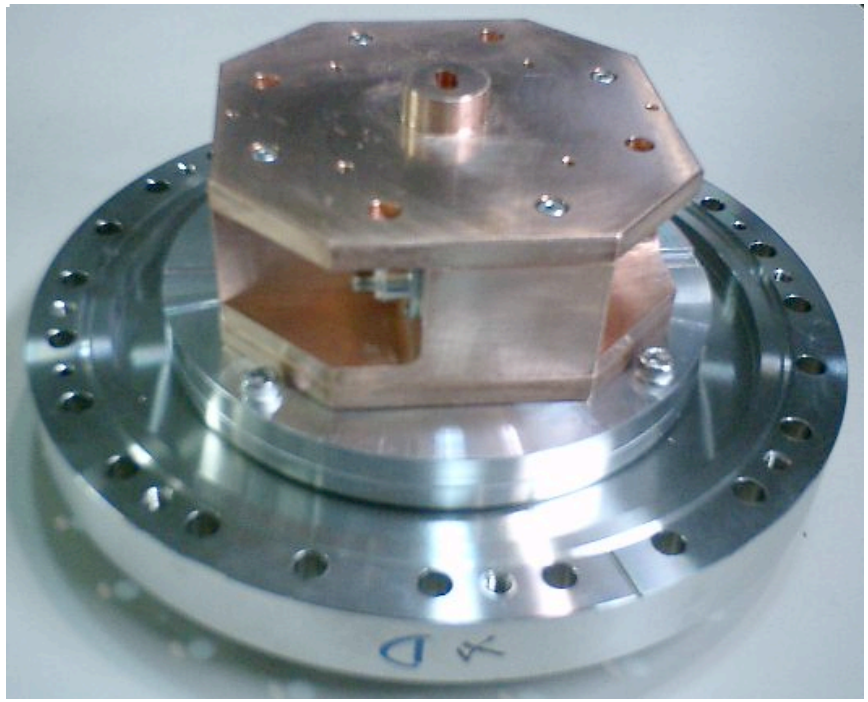
- Beam test plan in June
  - put the test model in a vacuum vessel and install in ATF linac-end
- Test item in the beam test
  - check sensitivity (compare with Q-BPM)
  - check transient signal (compare with/without BPF)
  - check angle sensitivity (might be difficult to test)
- Electronics
  - already have one set of modules (from BPM to ADC)
  - under testing using an rf source (noise, linearity, etc..)
- Plan after coming summer
  - replace KEK NanoBPM with IP-BPM to measure the resolution.