NEXT ASS'Y: FINAL ASS'Y:

NOTES:

1. FOR NOTES, SEE DWG S2.01.02.

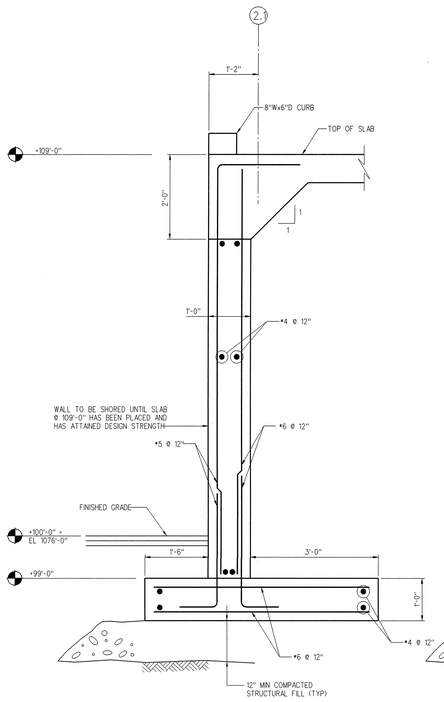

A 52.01.02 SECTION
SCALE: 3/4" = 1'-0" SSC015-4

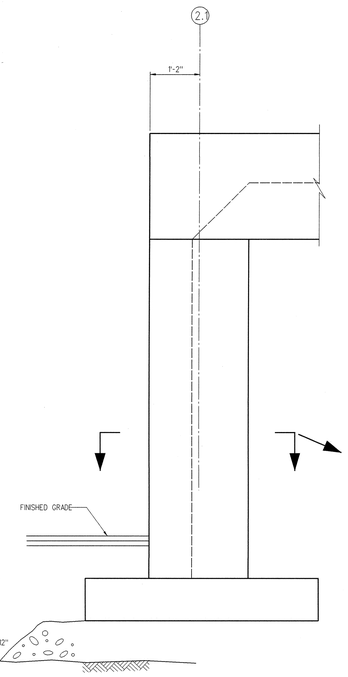

B 52.01.02 ELEVATION
SCALE: 3/4" = 1'-0" SSC015-4

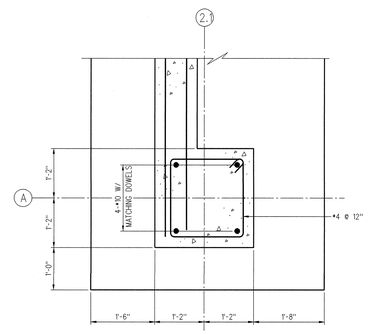

PLAN

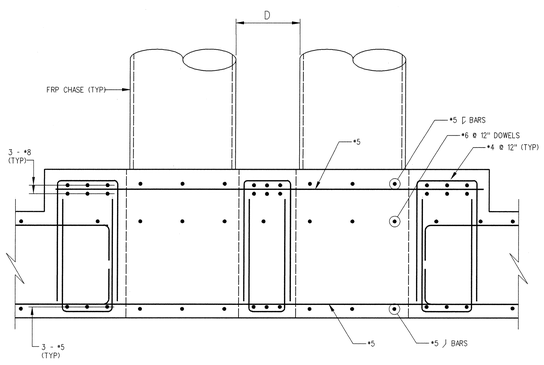

D < 3'-0"

NOTE:
SEE DWG S4.20.10 FOR DETAILS OF ADDITIONAL REINFORCING AT OPENINGS.

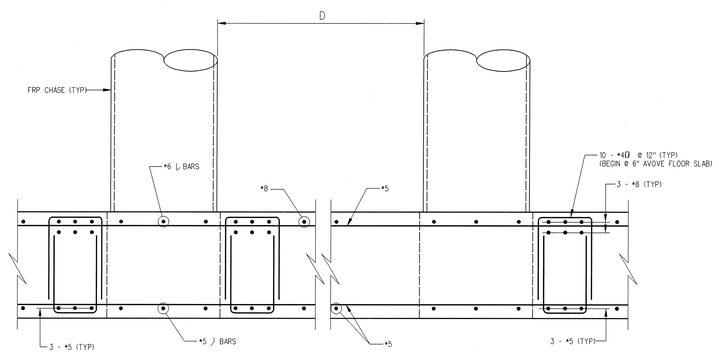

D > 3'-0"
FOR 24", 30" & 36" PIPES ONLY

C S3.20.10 SECTION
SCALE: 3/4" = 1'-0" SSC015-4

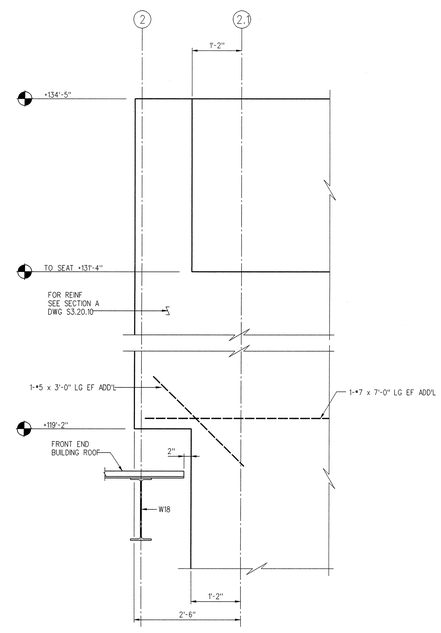

D 52.02.02/52.09.02 SECTION
SCALE: 3/4" = 1'-0" SSC015-4

1' 6" 0 1' 2'
SCALE: 3/4" = 1'-0"

NO REPRESENTATION OR WARRANTY, EXPRESSED OR IMPLIED, IS MADE AS TO THE ACCURACY, COMPLETENESS OR USEFULNESS OF THE INFORMATION OR STATEMENTS CONTAINED IN THESE DRAWINGS, OR THAT THE USE OR DISCLOSURE OF ANY INFORMATION, APPARATUS, METHOD, OR PROCESS DISCLOSED IN THESE DRAWINGS MAY NOT INFRINGE PRIVATE RIGHTS OF OTHERS. NO LIABILITY IS ASSUMED WITH RESPECT TO THE USE OF, OR FOR DAMAGES RESULTING FROM THE USE OF ANY INFORMATION, APPARATUS, METHOD, OR PROCESS DISCLOSED IN THESE DRAWINGS. DRAWINGS MADE AVAILABLE FOR INFORMATION TO BIDDER ARE NOT TO BE USED FOR OTHER PURPOSES AND ARE TO BE RETURNED UPON REQUEST OF THE FORWARDING CONTRACTOR.

NUMBER OF SECTION OR DETAIL
DRAWING ON WHICH SECTION OR DETAIL IS SHOWN
SECTION AND DETAIL KEY

THIS DOCUMENT CONTROLLED BY
CHANGE CONTROL SYSTEM 4
ENGINEERING PROCEDURE SNS-ENG-G00

REV	CHANGE TYPE	CONTROL SYSTEM	CHANGE REQUEST NUMBER	DESCRIPTION	DSN	CHK	DEPT	DATE	PE	DATE	PJ	DATE	REQ	DATE	UTB	DATE	RPE	RPE NO	DATE	ST	CV	EC	EE	EM	IE	M	PD	SE	AR
2	-	4	-	BASIS OF AWARD - 10/3/01	VPL	PP		10/3/01	CLG	10/3/01	PW	10/3/01					WC	106363		RCK	TW	BS	VS	BS	BJ	-	BS	-	MJ
1				CFC KLYSTRON SUBMITTAL - 6/27/01	VPL	PP		6/27/01	CG	6/28/01	TMcL	6/28/01				JL	6/28/01	WC	106363	6/27/01	RCK	TW	BS	VS	BS	BJ	-	BS	-	MJ
0				CFC FE/LN SUBSTRUCTURE SUBMITTAL - 3/30/01	PP	WC		3/30/01	CG	4/06/01	TMcL	4/06/01				JL	4/06/01	WC	106363	3/30/01	SC	TW	BS	RL	BS	BJ	-	BS	-	WS

REVISION OR ISSUE PURPOSE — REVISION APPROVALS — SQUAD CHECK

RPE: KERN-PING N. CHEN, REGISTERED ENGINEER, STATE OF TENNESSEE

DSGN	Y. GU/V. P. LALAS	
DRW	C. BAISLY	
CHK	W. CHEN	
DEPT		
PE	C. GARREN	4/6/01
PJ	T. MCLAUGHLIN	4/6/01
REQ		
UTB	J.R. LAWSON	4/6/01

REV. 2 DATE 10/3/01 — DRAWING APPROVALS

108030300-S8E-8300-A027

Knight Jacobs — Knight/Jacobs Joint Venture, 701 Scarboro Road, Oak Ridge, TN 37830, 865-241-9433, fax 865-241-3400

Sverdrup — A Jacobs Company

UT-BATTELLE — Oak Ridge National Laboratory, managed for the DEPARTMENT OF ENERGY under U.S. GOVERNMENT contract DE-AC05-00OR22725, UT-BATTELLE, LLC. Oak Ridge, Tennessee

PROJECT NAME:
SPALLATION NEUTRON SOURCE

LINAC TUNNEL AND KLYSTRON BUILDING SECTIONS IV

1	48 S	49 S	50	PLANT 8	BLDG 8300	FL 1	SH.	OF	TYPE S	CLASS
51		52		53	WBS 1.8.3.3	S3.20.15				REV 2

$DATE$ $TIME$
$FILE$