NEXT ASS'Y: | FINAL ASS'Y: 1

NOTES:

1. FOR NOTES, SEE DWG S2.01.02.

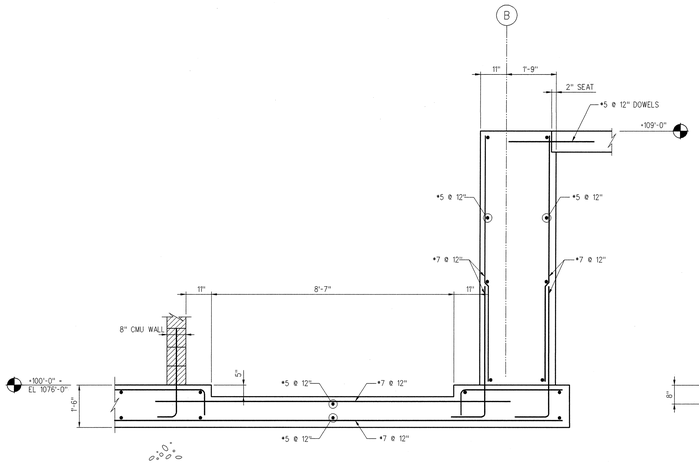

A S2.01.02 SECTION
SCALE: 1/2" = 1'-0" SSC011-4

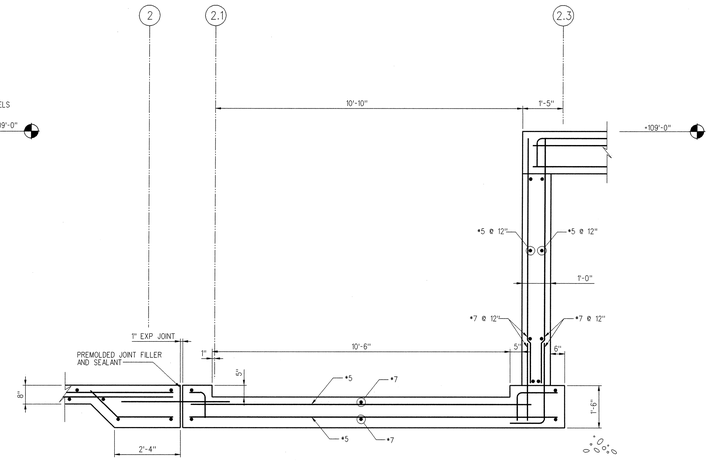

B S2.01.02 SECTION
SCALE: 1/2" = 1'-0" SSC011-4

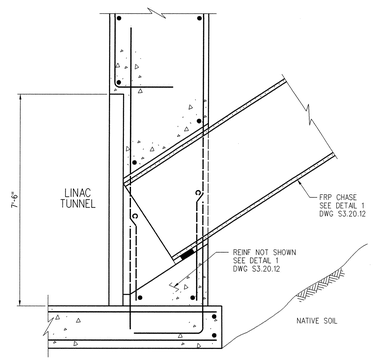

C S2.01.02/S2.01.03 SECTION
SCALE: 1/2" = 1'-0" SSC014-4

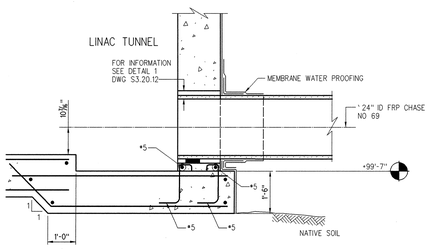

D S2.01.08 SECTION
SCALE: NTS SSC014-4

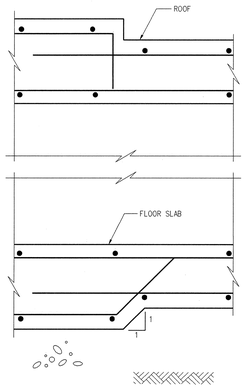

SLAB DEPTH TRANSITION DETAIL
SCALE: 3/4" = 1'-0" SSC014-4

2' 1' 0 2' 4'
SCALE: 1/2" = 1'-0"

1' 6" 0 1' 2'
SCALE: 3/4" = 1'-0"

108030300-S8E-8300-A026

Knight Jacobs SNS
Knight/Jacobs Joint Venture
701 Scarboro Road
Oak Ridge, TN 37830
865-241-9433
fax 865-241-3400

Sverdrup — A Jacobs Company

UT-BATTELLE
Oak Ridge National Laboratory
managed for the DEPARTMENT OF ENERGY under
U.S. GOVERNMENT contract DE-AC05-000R22725
UT-BATTELLE, LLC, Oak Ridge, Tennessee

PROJECT NAME:
SPALLATION NEUTRON SOURCE

LINAC TUNNEL AND
KLYSTRON BUILDING SECTIONS III

1	48 S	49 S	50	PLANT 8	BLDG 8300	FL 1	SH.	OF	TYPE S	CLASS
51		52		53	WBS 1.8.3.3	S3.20.14			REV 1

RPE	DSGN P. PARAVALOS	3/30/01
	DRW C. BAISLY	3/30/01
	CHK W. CHEN	3/30/01
	DEPT	
	PE C. GARREN	4/6/01
	PJ T. MCLAUGHLIN	4/6/01
	REQ	
REV. 1 DATE 4/4/01	UTB J.R. LAWSON	4/6/01
DRAWING APPROVALS		

REV	CHANGE TYPE	CHANGE CONTROL SYSTEM	SCHEDULE ACTIVITY NUMBER	DESCRIPTION	DSGN	CHK	DEPT	DATE	PE	DATE	PJ	DATE	REQ	DATE	UTB	DATE	RPE	RPE NO	DATE	ST	CV	EC	EE	EM	IE	M	PD	SE	AR
1	-	4	-	BASIS OF AWARD - 10/3/01	PP	WC		10/3/01	CLG	10/3/01	JW	10/3/01					WC	106363	10/4/01	SC	TW	BS	RL	BS	BJ	-	BS	-	WS
0				CFC FE/LN SUBSTRUCTURE SUBMITTAL - 3/30/01	PP	WC		3/30/01	CG	4/06/01	MCL	4/06/01			JL	4/06/01	WC	106363	3/30/01	SC	TW	BS	RL	BS	BJ	-	BS	-	WS

REVISION OR ISSUE PURPOSE — REVISION APPROVALS — SQUAD CHECK

NO REPRESENTATION OR WARRANTY, EXPRESSED OR IMPLIED, IS MADE AS TO THE ACCURACY, COMPLETENESS OR USEFULNESS OF THE INFORMATION OR STATEMENTS CONTAINED IN THESE DRAWINGS, OR THAT THE USE OR DISCLOSURE OF ANY INFORMATION, APPARATUS, METHOD, OR PROCESS DISCLOSED IN THESE DRAWINGS MAY NOT INFRINGE PRIVATE RIGHTS OF OTHERS. NO LIABILITY IS ASSUMED WITH RESPECT TO THE USE OF, OR FOR DAMAGES RESULTING FROM THE USE OF ANY INFORMATION, APPARATUS, METHOD, OR PROCESS DISCLOSED IN THESE DRAWINGS. DRAWINGS MADE AVAILABLE FOR INFORMATION TO BIDDER ARE NOT TO BE USED FOR OTHER PURPOSES AND ARE TO BE RETURNED UPON REQUEST OF THE FORWARDING CONTRACTOR.

NUMBER OF SECTION OR DETAIL
DRAWING ON WHICH SECTION OR DETAIL IS SHOWN
SECTION AND DETAIL KEY

THIS DOCUMENT CONTROLLED BY
CHANGE CONTROL SYSTEM 4
ENGINEERING PROCEDURE SNS-ENG-GOO

$DATE$ $TIME$ $FILE$