NEXT ASS'Y: FINAL ASS'Y:

NOTES:

1. FOR NOTES, SEE DWG S2.01.02.
2. PROVIDE CONCRETE INSERTS IN SOUTH WALL AND ROOF OF TUNNEL. INSERTS SHALL BE GALVANIZED STEEL WITHIN LIMITS SHOWN ON THE PLANS. FOR DETAIL SEE DWG S4.20.10.

1 T4-04

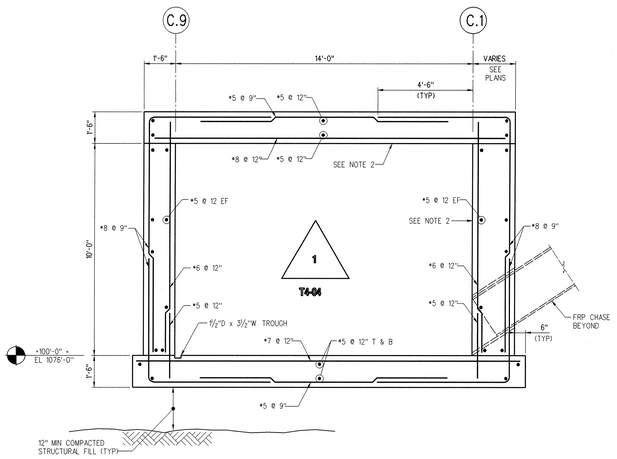

A S2.01.02 TO S2.01.13 SECTION SCALE: 3/8" = 1'-0" SSC013-4

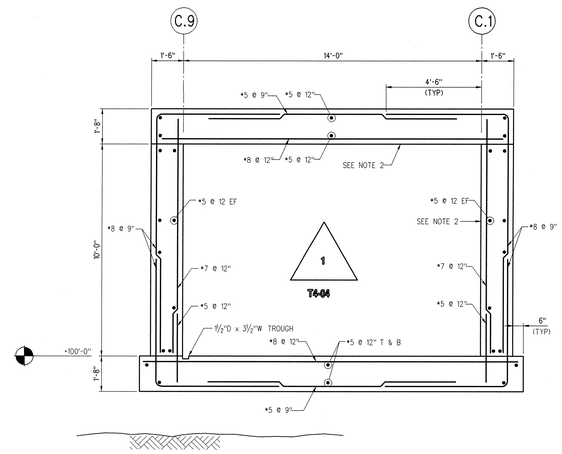

B S2.01.13 SECTION SCALE: 3/8" = 1'-0" SSC013-4

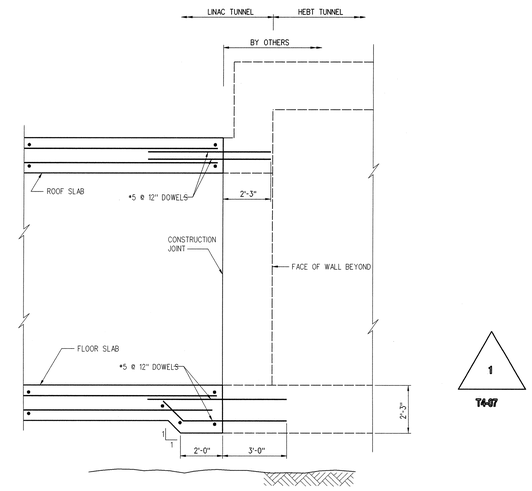

C S2.01.13 SECTION SCALE: 3/8" = 1'-0" SSC013-4

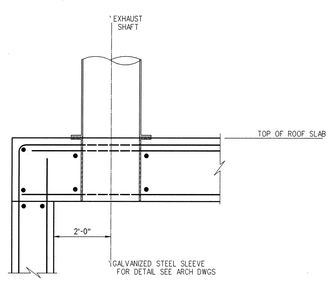

D S2.01.06 / S2.01.10 SECTION SCALE: 1/2" = 1'-0" SSC013-4

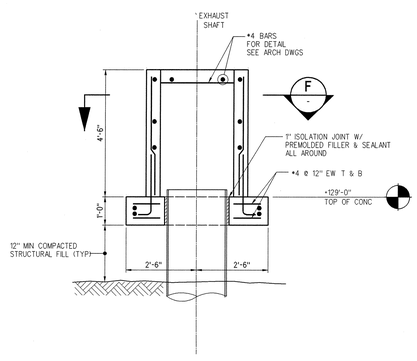

E S2.01.06 / S2.01.11 SECTION SCALE: 1/2" = 1'-0" SSC013-4

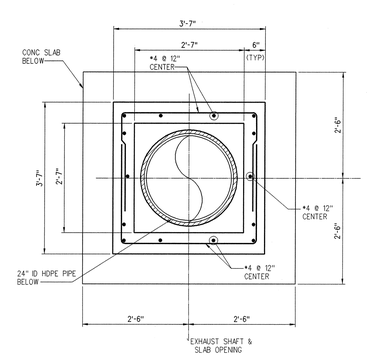

F - SECTION SCALE: 3/4" = 1'-0" SSC013-4

1 T4-04

3' 2' 1' 0 3' 6'
SCALE: 3/8" = 1'-0"

1' 6" 0 1' 2'
SCALE: 3/4" = 1'-0"

NO REPRESENTATION OR WARRANTY, EXPRESSED OR IMPLIED, IS MADE AS TO THE ACCURACY, COMPLETENESS OR USEFULNESS OF THE INFORMATION OR STATEMENTS CONTAINED IN THESE DRAWINGS, OR THAT THE USE OR DISCLOSURE OF ANY INFORMATION, APPARATUS, METHOD, OR PROCESS DISCLOSED IN THESE DRAWINGS MAY NOT INFRINGE PRIVATE RIGHTS OF OTHERS. NO LIABILITY IS ASSUMED WITH RESPECT TO THE USE OF, OR FOR DAMAGES RESULTING FROM THE USE OF ANY INFORMATION, APPARATUS, METHOD, OR PROCESS DISCLOSED IN THESE DRAWINGS. DRAWINGS MADE AVAILABLE FOR INFORMATION TO BIDDER ARE NOT TO BE USED FOR OTHER PURPOSES AND ARE TO BE RETURNED UPON REQUEST OF THE FORWARDING CONTRACTOR.

NUMBER OF SECTION OR DETAIL
DRAWING ON WHICH SECTION OR DETAIL IS SHOWN
SECTION AND DETAIL KEY

THIS DOCUMENT CONTROLLED BY
CHANGE CONTROL SYSTEM 4
ENGINEERING PROCEDURE SNS-ENG-G00

REV	Change TYPE	Control CONTROL SYSTEM	Control SEQUENCE NUMBER	DESCRIPTION	DSN	CHK	DEPT	DATE	PE	DATE	PJ	DATE	REQ	DATE	UTB	DATE	RPE	RPE NO	DATE	ST	CV	EC	EE	EM	IE	M	PD	SE	AR
2	-	4	-	BASIS OF AWARD - 10/3/01	RCK	VPL		10/3/01	CLG	10/4/01	[illegible]	10/3/01			[illegible]	10/4/01	WC	106363	10/4/01	RCK	TW	BS	VS	BS	BJ	-	BS	-	MJ
1				DCN'S T4-04 & T4-07 - 6/27/01	RCK	VPL		6/27/01	CC	6/28/01	TMcL	6/28/01			JL	6/28/01	WC	106363	6/27/01	RCK	TW	BS	VS	BS	BJ	-	BS	-	MJ
0				CFC FE/LN SUBSTRUCTURE SUBMITTAL - 3/30/01	PP	WC		3/30/01	CG	4/06/01	TMcL	4/06/01			JL	4/06/01	WC	106363	3/30/01	SC	TW	BS	RL	BS	BJ	-	BS	-	WS

REVISION OR ISSUE PURPOSE — REVISION APPROVALS — SQUAD CHECK

RPE — REV. 2 DATE 10/4/01

DSGN	P. PARAVALOS	3/30/01
DRW	C. BAISLY	3/30/01
CHK	W. CHEN	3/30/01
DEPT		
PE	C. GARREN	4/6/01
PJ	T. MCLAUGHLIN	4/6/01
REQ		
UTB	J.R. LAWSON	4/6/01

DRAWING APPROVALS

108030200-S8E-8200-A001

Knight Jacobs
Knight Jacobs Joint Venture
701 Scarboro Road
Oak Ridge, TN 37830
865-241-9433
fax 865-241-3400
Sverdrup — A Jacobs Company

UT-BATTELLE
Oak Ridge National Laboratory
managed for the DEPARTMENT OF ENERGY under U.S. GOVERNMENT contract DE-AC05-00OR22725
UT-BATTELLE, LLC. Oak Ridge, Tennessee

PROJECT NAME:
SPALLATION NEUTRON SOURCE

LINAC TUNNEL AND
KLYSTRON BUILDING SECTIONS II

1	48 S	49 S	50	PLANT 8	BLDG 8200	FL 1	SH.	OF	TYPE S	CLASS
51	52		53	WBS 1.8.3.2	S3.20.13					REV 2

$DATE$ $TIME$ $FILE$