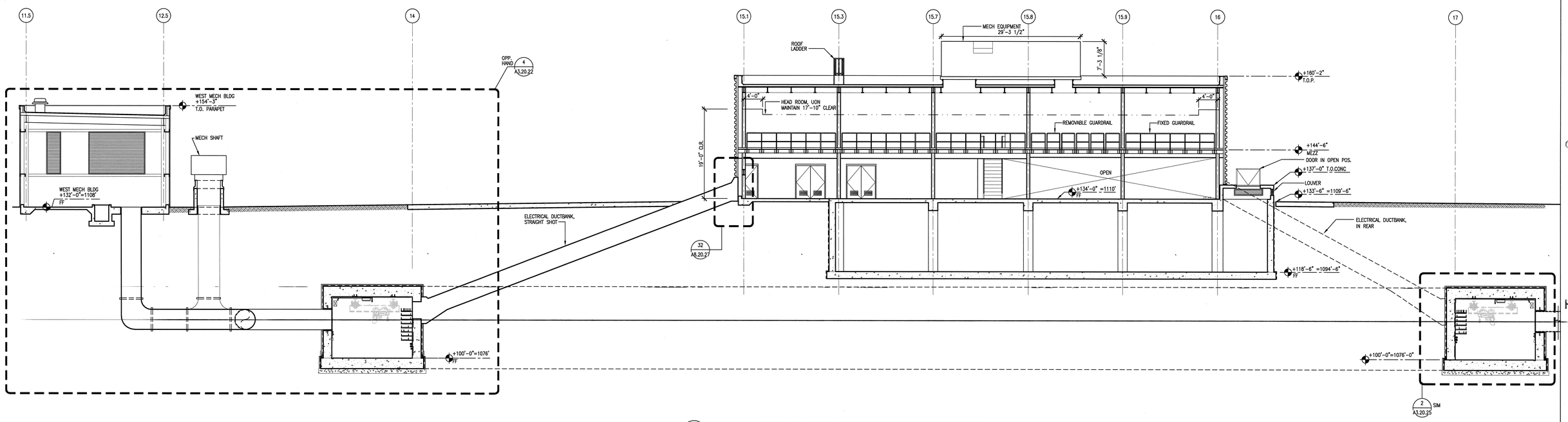

1 A2.03.28 EAST/WEST SECTION THROUGH RING SERVICE BUILDING AND TUNNEL

SCALE 1/8"=1'-0"

ASC020-3

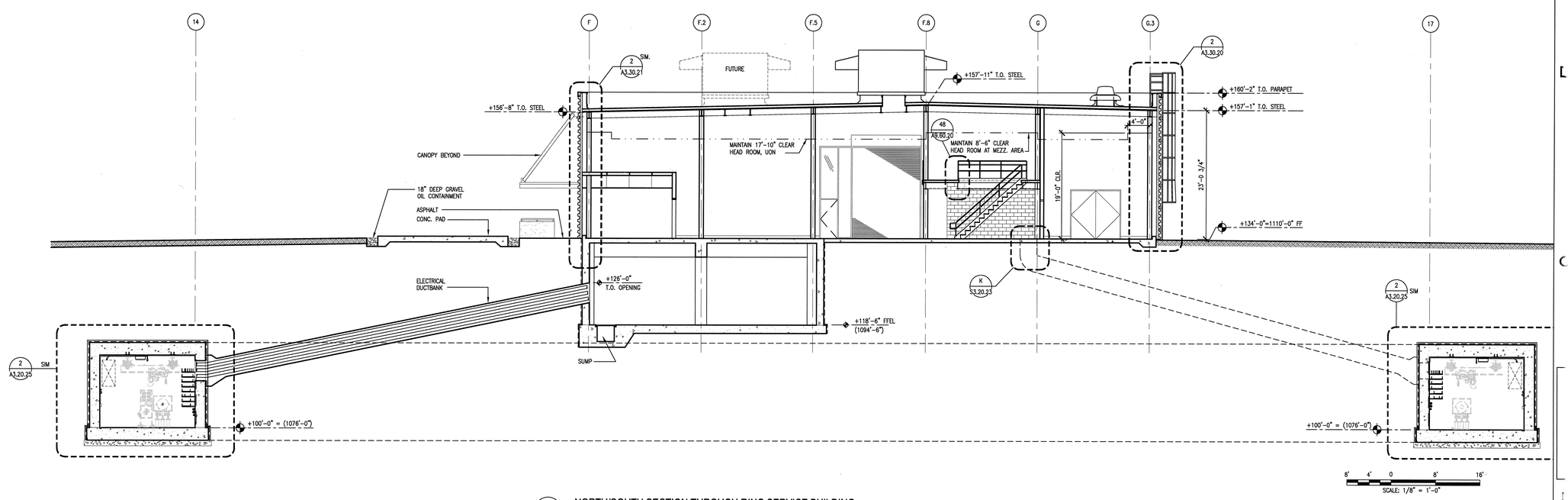

8' 4' 0 8' 16'

SCALE: 1/8" = 1'-0"

2 A2.03.28 NORTH/SOUTH SECTION THROUGH RING SERVICE BUILDING

SCALE: 1/8" = 1'-0"

ASC030-3

NO REPRESENTATION OR WARRANTY, EXPRESSED OR IMPLIED, IS MADE AS TO THE ACCURACY, COMPLETENESS OR USEFULNESS OF THE INFORMATION OR STATEMENTS CONTAINED IN THESE DRAWINGS, OR THAT THE USE OR DISCLOSURE OF ANY INFORMATION, APPARATUS, METHOD, OR PROCESS DISCLOSED IN THESE DRAWINGS MAY NOT INFRINGE PRIVATE RIGHTS OF OTHERS. NO LIABILITY IS ASSUMED WITH RESPECT TO THE USE OF, OR FOR DAMAGES RESULTING FROM THE USE OF ANY INFORMATION, APPARATUS, METHOD, OR PROCESS DISCLOSED IN THESE DRAWINGS. DRAWINGS MADE AVAILABLE FOR INFORMATION TO BIDDER ARE NOT TO BE USED FOR OTHER PURPOSES AND ARE TO BE RETURNED UPON REQUEST OF THE FORWARDING CONTRACTOR.

NUMBER OF SECTION OR DETAIL

DRAWING ON WHICH SECTION OR DETAIL IS SHOWN OR TAKEN

SECTION AND DETAIL KEY

THIS DOCUMENT CONTROLLED BY

CHANGE CONTROL SYSTEM 4

ENGINEERING PROCEDURE SNS-ENG-0001

REV	CHANGE TYPE	CHANGE CONTROL SYSTEM	CHANGE REQUEST NUMBER	DESCRIPTION	DSN	CHK	DEPT
1	C	4	–	BASIS OF AWARD – 01/25/02	MJ	TW	
0				CERTIFIED FOR CONSTRUCTION – 8/01/01	MJ	TW	

REVISION OR ISSUE PURPOSE

DATE	PE	DATE	PJ	DATE	REQ	DATE	UTB	DATE	RPE	RPE NO	DATE
	CJG	8/2/01	JS	8/1/01			JRL	8/1/01	JPD	101974	8/1/2001
									RLB	102104	1/9/2002

REVISION APPROVALS

ST	CV	EC	EE	EM	IE	M	PD	SE	AR
SIC	AW	BS	RL	BS	BJ	–	BS	–	WS
									SC AW BS RL BS BJ – BS – WS

SQUAD CHECK

RPE

ROBERT L. BARNES REGISTERED ARCHITECT NO. 102104 STATE OF TENNESSEE

24 Jan 01

REV.	DATE
UTB	JR LAWSON 8/2/2001

DRAWING APPROVALS

DSN	M. JEDYNAK	8/1/2001
DRW	S. WONG	8/1/2001
CHK	T. WONG	8/1/2001
DEPT		
PE	C. GARREN	8/2/2001
PJ	J. STELLEN	8/1/2001
REQ		

108030000-A8E-8000-A029

Knight/Jacobs Joint Venture
701 Scarboro Road, MS 8253
Oak Ridge, TN 37830
865-241-9433
fax 865-241-3400

KNIGHT
Knight Advanced Technology
1453 Mission Street
San Francisco, CA 94103

UT-BATTELLE
Oak Ridge National Laboratory
managed for the DEPARTMENT OF ENERGY under U.S. GOVERNMENT contract DE-AC05-00OR22725
UT-BATTELLE, LLC. ★ Oak Ridge, Tennessee

PROJECT NAME:
SPALLATION NEUTRON SOURCE
RING SERVICE & RING TUNNEL
BUILDING SECTIONS

1	48	49	50	PLANT	BLDG	FL	SH.	OF	TYPE	CLASS
3	A	X	X	8	8000		1	1	S	U
51		52		53	WBS					REV
NC		NA			1.8.3		A3.20.21			1

Date: 01/23/2002 Time: 09:57:31
Username: MONGE
D:\PDF2_WS\JEFFREDS\TD\SD_FDS_OADD\ASB_FL2\AE_FL2\TA3-20-21.DWG

AutoCAD