Present Status of the Considerations to the TESLA Waveguide System

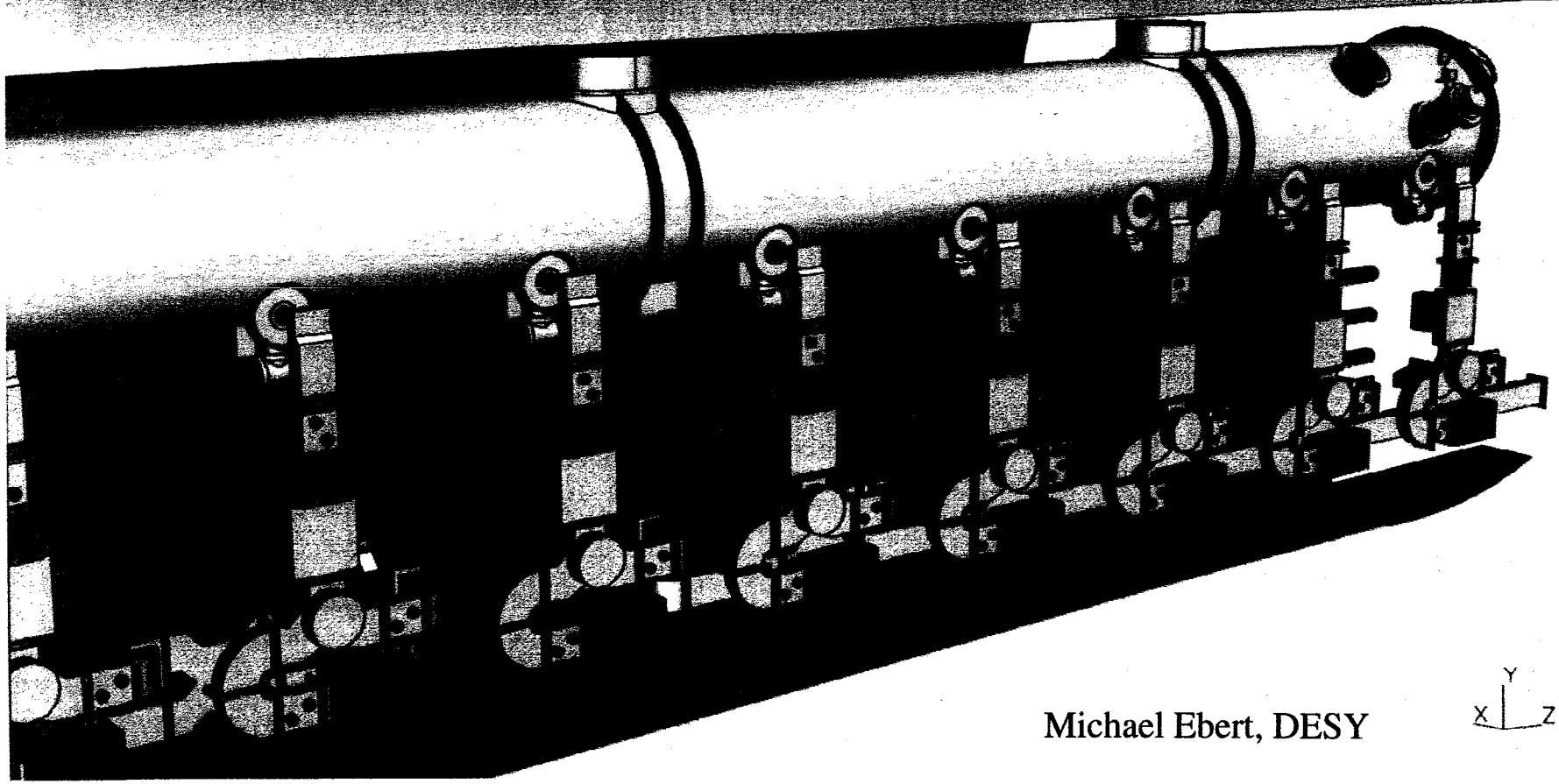

Michael Ebert, DESY

RF Power Distribution

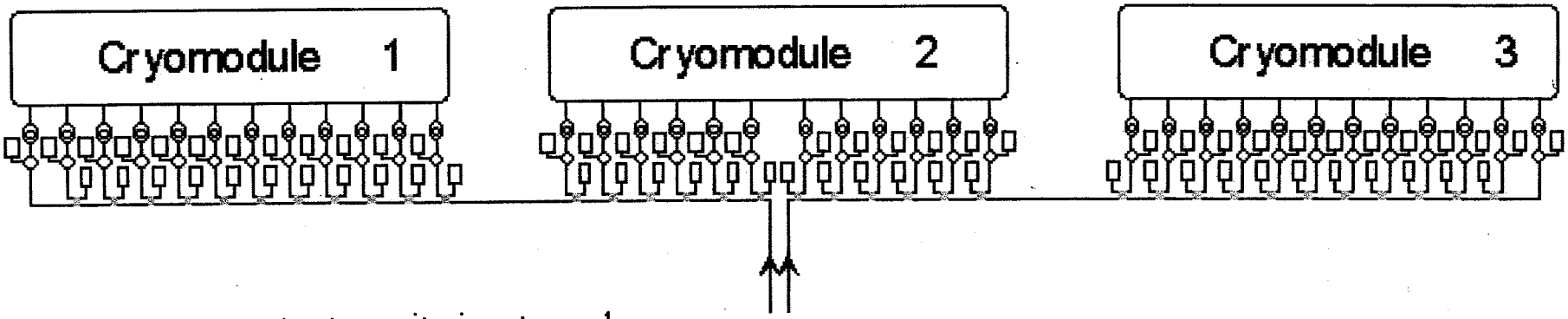

Detail

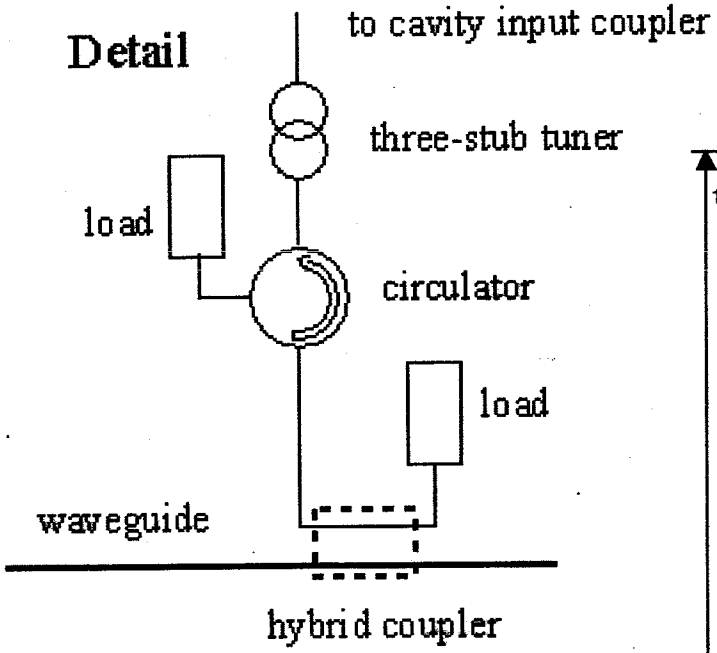

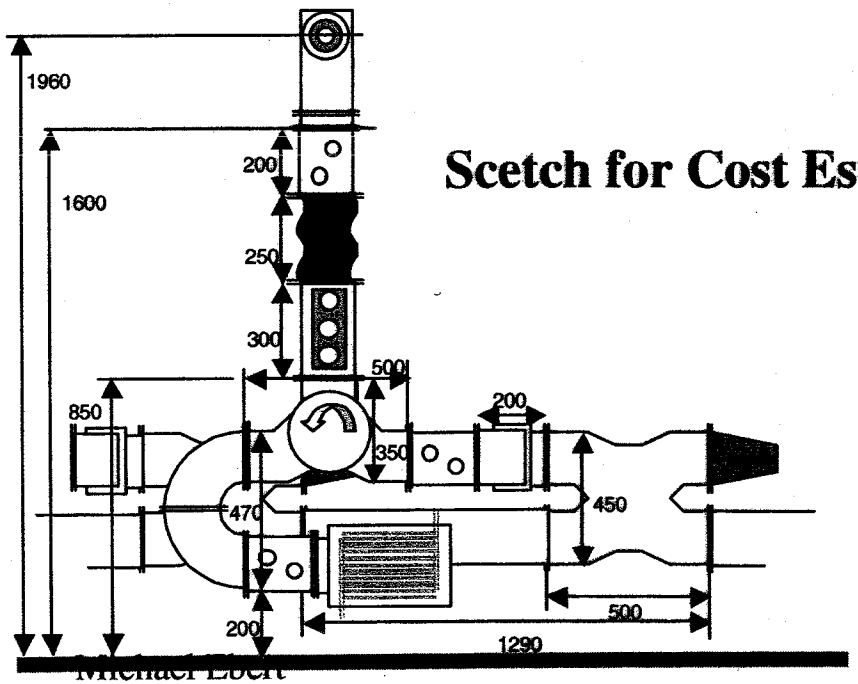

Scetch for Cost Estimation

Waveguide System Data

Waveguide type	WR-650
Power capability	
At most ideal conditions	58 MW
Experience	> 5 MW
Max. required at Klystron output	5 MW_{peak} / 70 kW_{ave}
At circulators / cavity coupler	280 kW_{peak} / 3.9 kW_{ave}
Losses and temperatures	
Waveguide loss	0.22 % /m
Circulator loss	< 2%
Reflected power (due to cavity filling)	1 kW_{ave} per circulator
Max. waveguide temperature	50°C + $T_{ambient}$
Max. long. Waveguide expansion	1.1 mm/m
Max. phase shift (1st => last cavity)	15°

Components already in Service at TTF

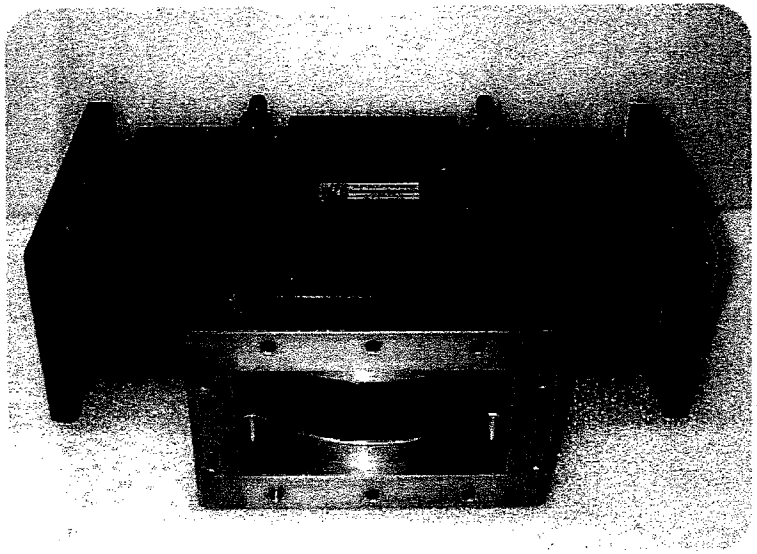

Circulator	**FERRITE WFHI 3-4**
Peak input power, MW	0.4
Average power, kW	8
Isolation at 1.3 GHz, dB	> 30
Insertion loss at 1.3 GHz, dB	< 0.08
Input return loss at 1.3 GHz (for full output reflection)	> 26dB

Load	**FERRITE WFHL 3-1**
Peak input power, MW	2.0
Average power, kW	10
Return loss at 1.3 GHz, dB	>32
Physical length, mm	385

Components already in Service at TTF

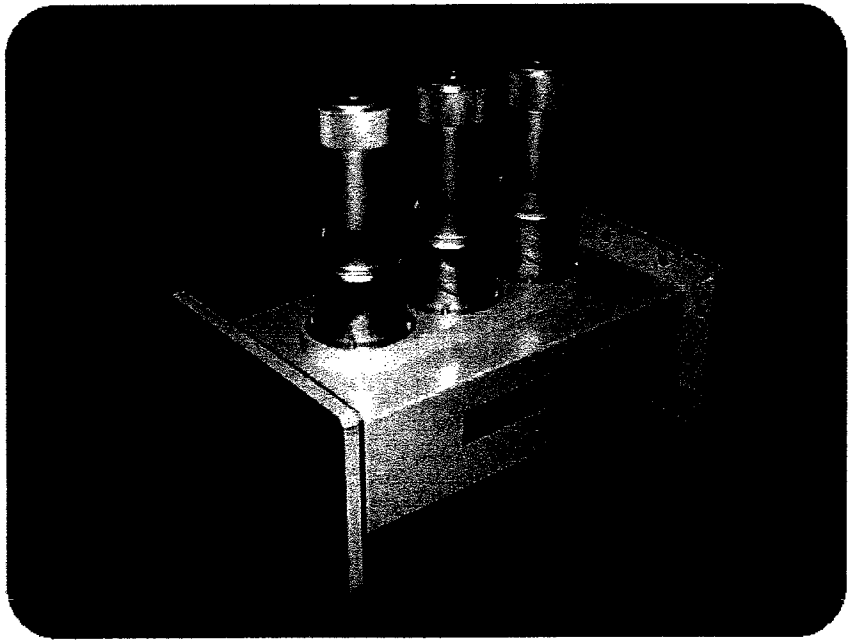

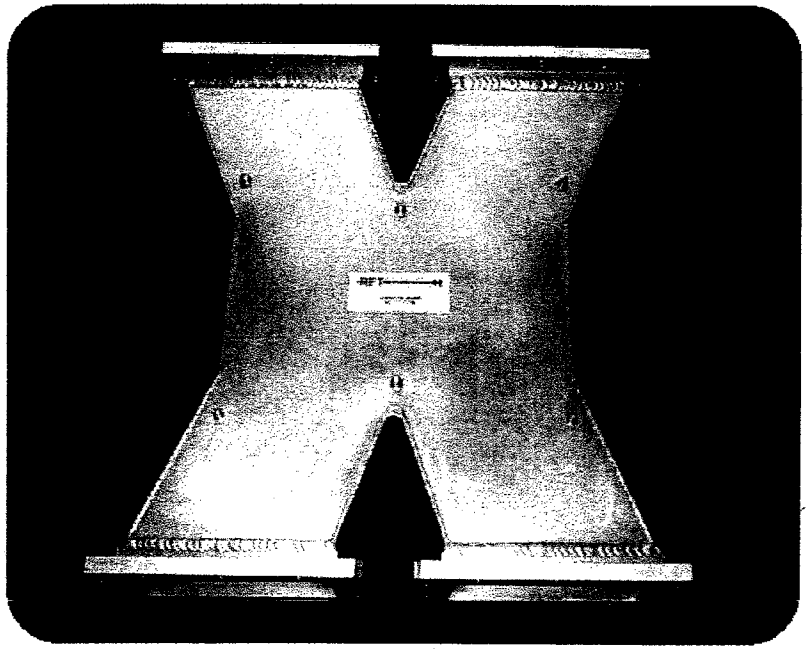

3-Stub-Tuner	**BVERIC** (Beijing, China)
Phase tuning range, degree	+/-60
Impedance matching range	$1/3Z_w$ - $3Z_w$
Max power, MW	2

Hybrid Coupler	**RFT**
Directivity, dB	> 30
Return loss, dB	> 35
Coupling factor, dB	12.6 - 3.0
Accuracy of coupling factor, dB	+/-0.2

* Z_w – waveguide impedance

Current Investigations and Developments

- Adjustable Waveguide Hybrid Coupler (+/- 1dB)
  - Investigations for 2 different designs are set on foot.
  - For one design first low level measurements are available
- Waveguide Transformer (Tuner)
  - development of an alternative high power E-H-Transformer in cooperation with MEPhI is on the way.

    Advantages:
    - 2 sliding shorts instead of 3 Plungers,
    - expected higher power capability,
    - power capability independent of adjusted transformation,
    - can be used as waveguide switch.
- Kapton Waveguide Windows
  - Could be necessary to increase the power capability of waveguide components due to pressurizing.

E-H-Transformer

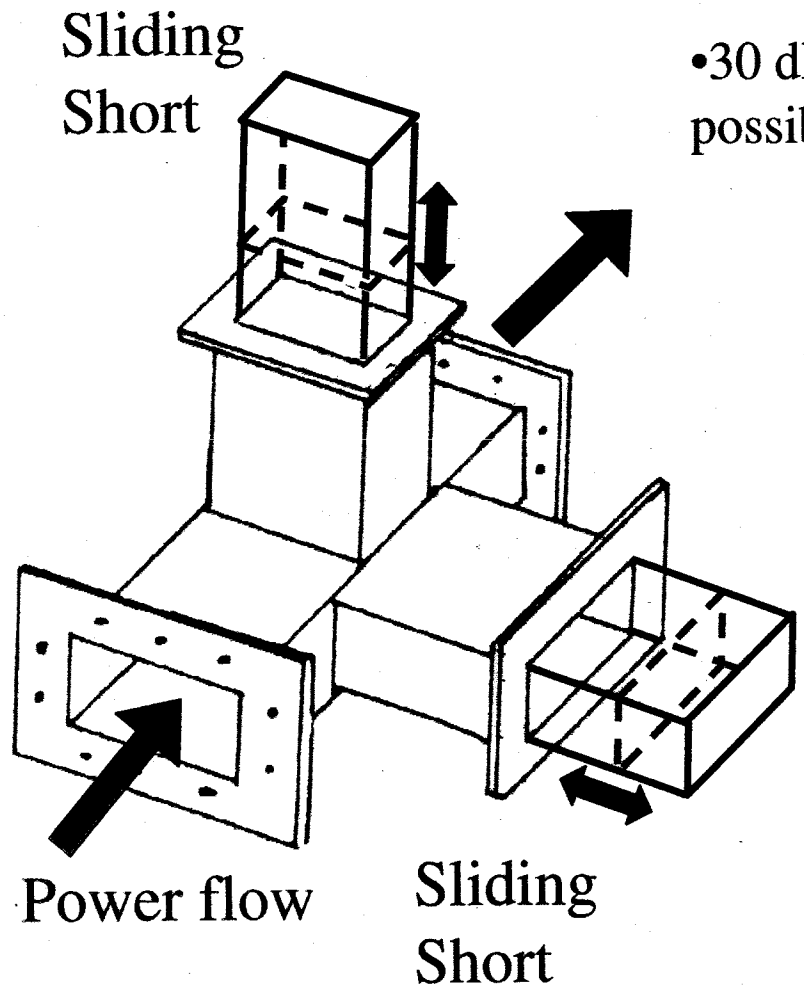

Advatages:

- Phase shift range 360°
- Impedance transformation within the whole Smith-Chart area possible
- 30 dB decoupling between cavity and power source possible

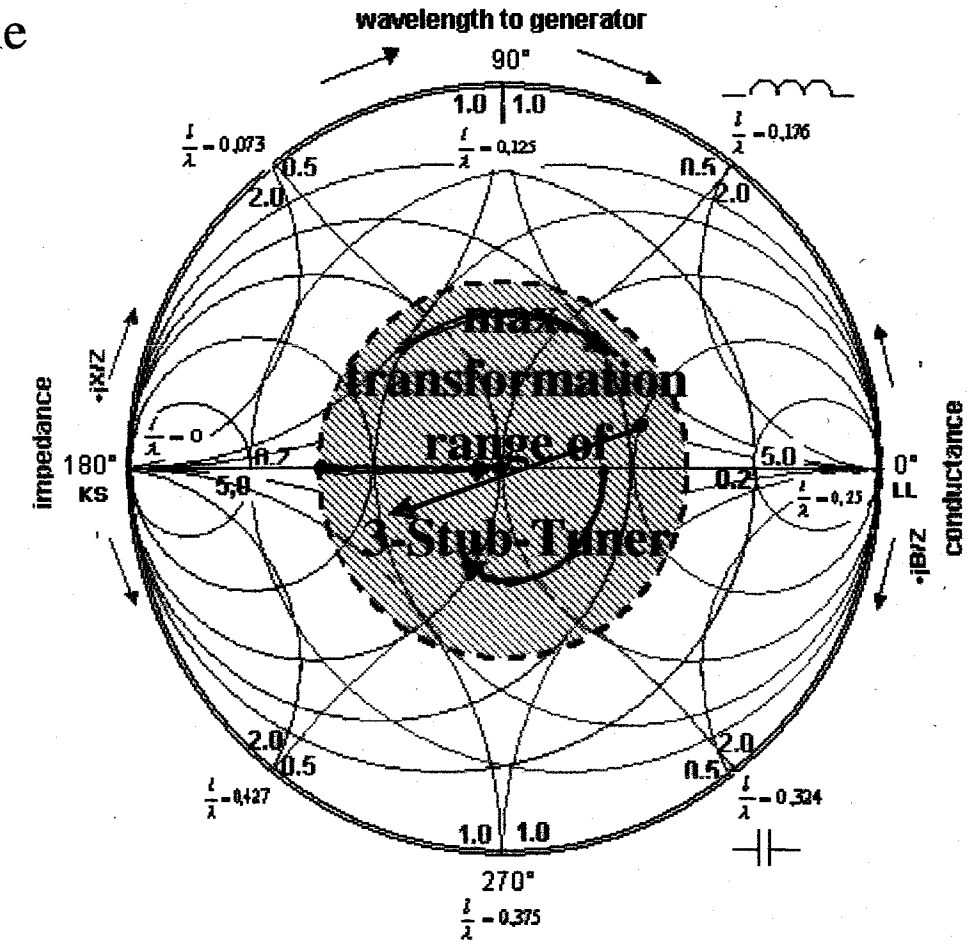

HYBRID COUPLER WITH ADJUSTABLE COUPLING FACTOR

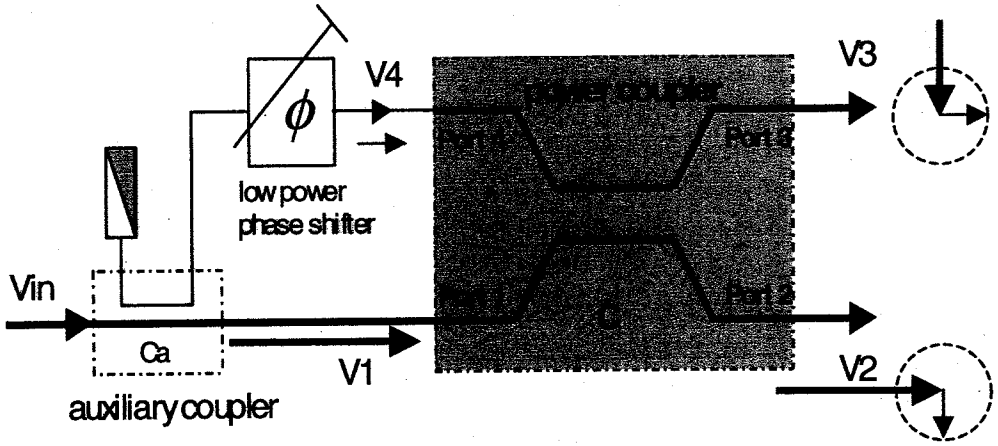

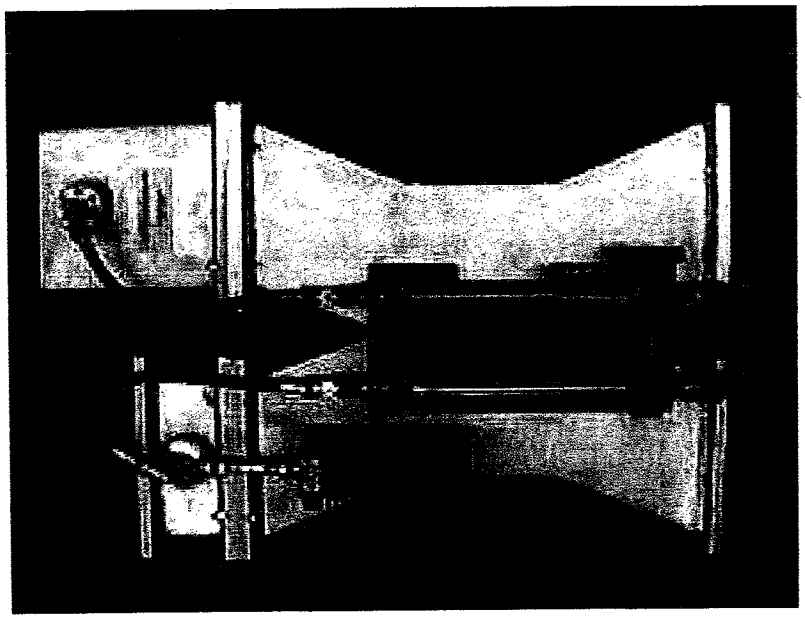

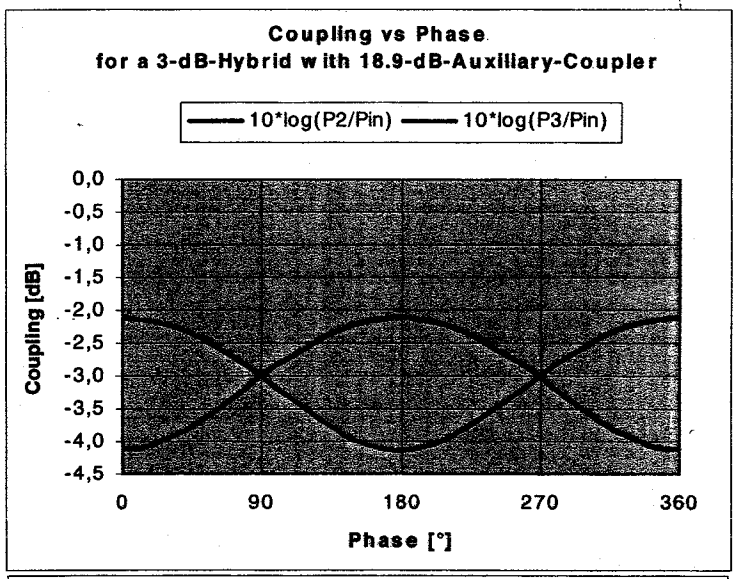

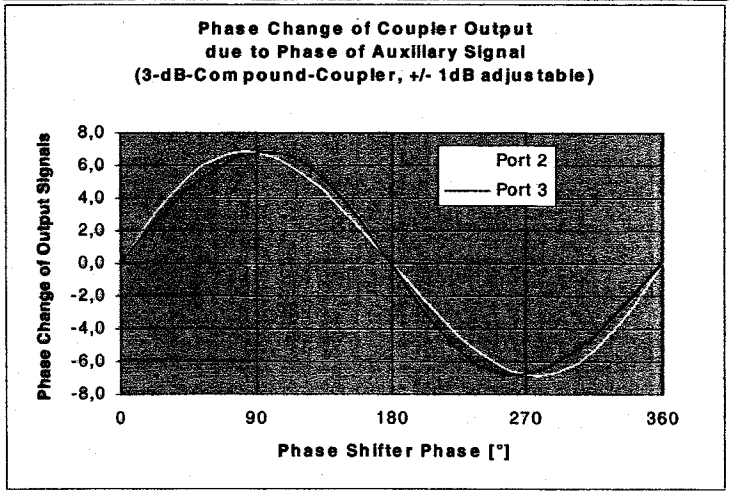

Some Ideas for next Investigations and Developments

Searching for cost saving waveguide designs

- More welded joints, less flanges (one flange-joint costs € 45 [1)], 500 flanges per rf system, saving potential >10%)
- More relaxed tolerances than laid down in EIA standards
- Cheaper joint techniques (spot welding?)

Increasing power capability from > 5MW to >10 MW

- Idea: in situ conditioning via spark erosion technique

Enlarging power capability and cost reduction of circulators

- Test of a new circulator design without sparking susceptibly gap.
- Combining of circulator, load and transformer to a single unit.

1) Price for 300,000 items