REV.	DESCRIPTION	DRAWN / APPD.	DATE / DATE
A	UPDATED DRAWING SHOWING FITTING CONNECTOR CHANGES, ITEM 4	B. BROWN	6-21-96
B	RELOCATED THERMOCOUPLE HOLE 125 63/64" DIM. WAS 110 53/64". ADDED 1 1/2" & 3 1/2" DIM.	B. BROWN	4-21-97

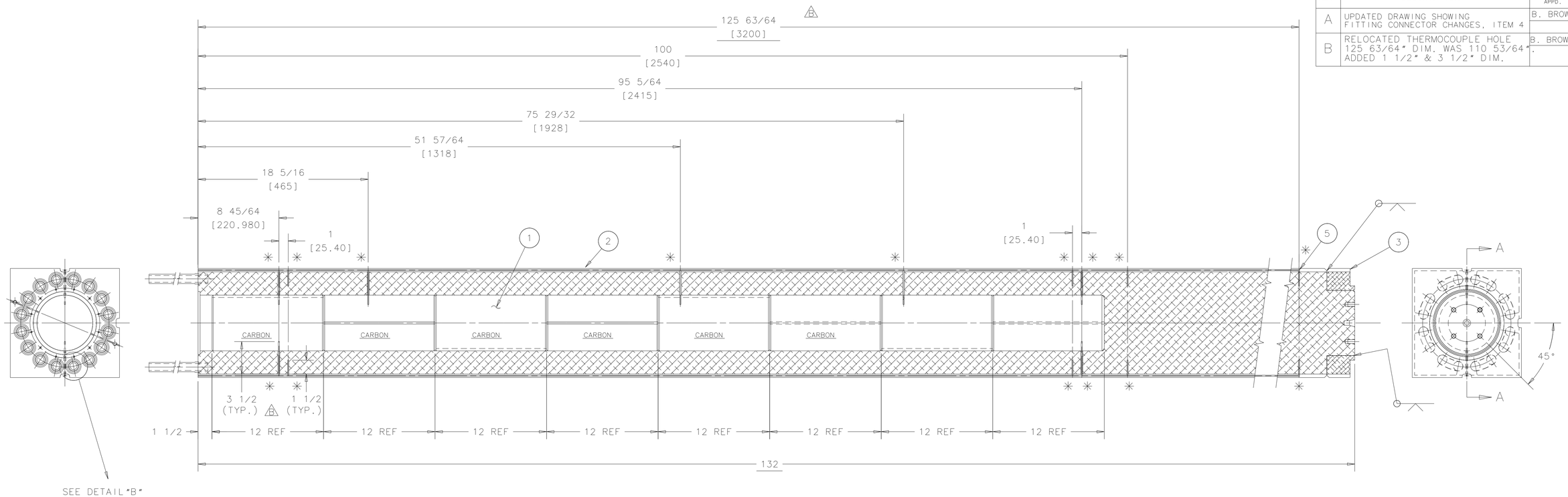

SECTION A-A

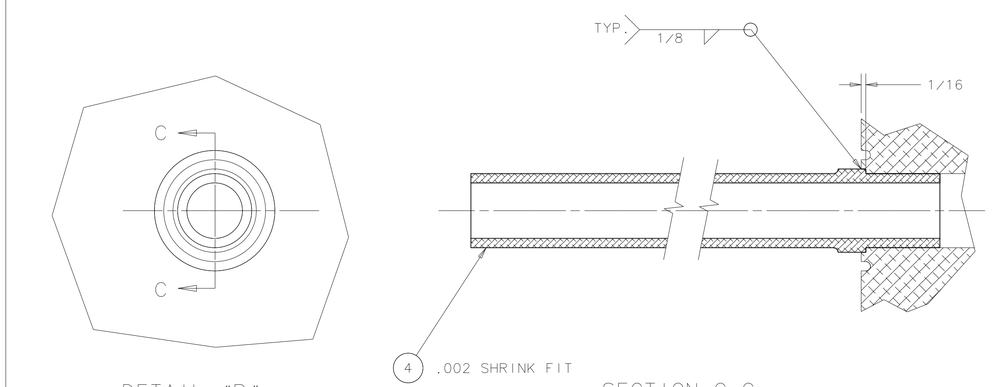

DETAIL "B"
TYP. (16) PLACES
SCALE 1:2

SECTION C-C
SCALE 1:2

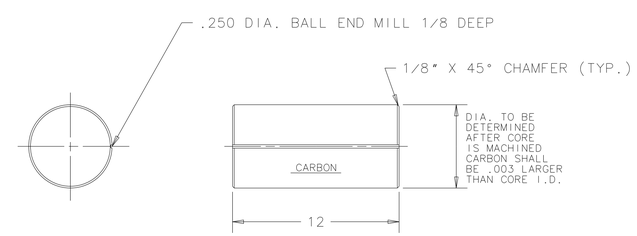

DETAIL ITEM 1

NOTE: ✳ INDICATES THERMOCOUPLE LOCATION, DRILL 1/8" DIA. HOLES FOR THERMOCOUPLE.

ITEM	PART NO.	DESCRIPTION OR SIZE	QTY.
5		OMEGA TYPE "J" THERMOCOUPLE ICSS-18U-12-NHX	15
4	MB-337088	CONNECTOR FITTING	16
3	MD-337084	CORE HOUSING END	1
2	ME-337080	CORE HOUSING	1
1		CARBON (SEE DETAIL)	8

PARTS LIST

UNLESS OTHERWISE SPECIFIED			ORIGINATOR	M. REICHANADTER	
FRACTION	DECIMAL	ANGLES	DRAWN	B. BROWN	7-24-95
±1/64	±.010	±	CHECKED	M. REICHANADTER	6-11-96
			APPROVED	M. REICHANADTER	6-11-96

1. BREAK ALL SHARP EDGES 1/64 MAX.
2. DO NOT SCALE DRAWING.
3. DIMENSIONS BASED UPON ANSI Y14.5M-1982
4. MAX. ALL MACH. SURFACES 63 √

USED ON: ME-337076

MATERIAL

FERMI NATIONAL ACCELERATOR LABORATORY
UNITED STATES DEPARTMENT OF ENERGY

MAIN INJECTOR ABORT CORE BOX CORE AND CARBON ASSEMBLY

SCALE	FILMED	DRAWING NUMBER	REV.
3/16" = 1'		9512.000-MD-337085	B

CADFILE: [MI_337]337085B | CREATED WITH I-DEAS_VI | USER NAME: RBROWN