WELDING PROCEDURE SPECIFICATION
Specification No. SS-7

Welding Procedure Specification No. SS-7 Date April 21, 2008
Revision No._____ Date_____ Supporting PQRNo.(s) Fermi SS-3
Welding Processes 1) GTAW Type 1) Manual
(Manual, Auto, Semi) 2)_____ Type 2) _____

JOINTS (QW-402)

Joint Design Interior V-groove (see Figures in Details) Backing: Yes X No
Backing Material (Type) Root: Flange base material Remainder:_____
Retainer: Yes_____ No X Type: Non-Metallic_____ Metallic (non-fusing)_____

DETAILS

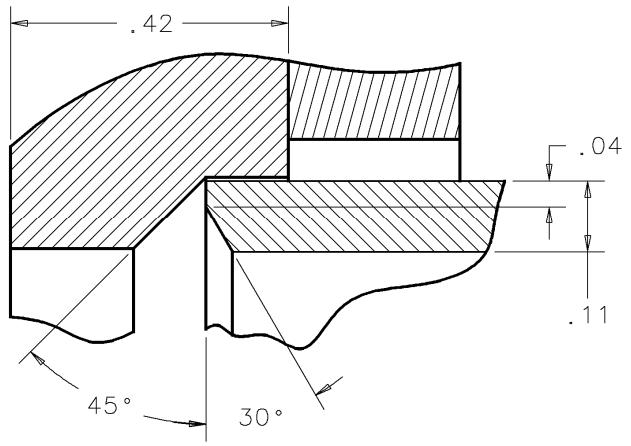

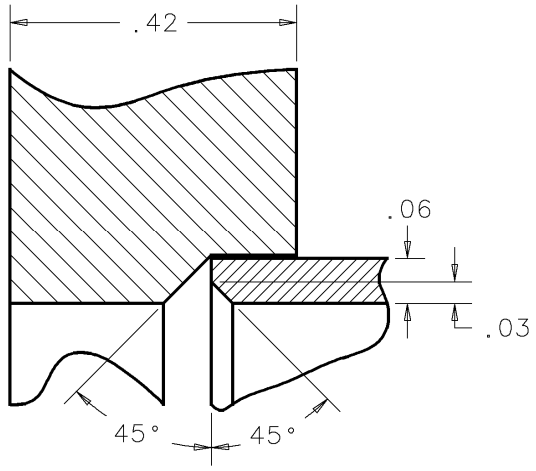

BASE METALS (QW-403)

P No. 8 Group 1 To P No. 8 Group 1
Specification Type and Grade SA312 316/316L pipe
To Specification Type and Grade 316/316L flange
OR
Chemical Analysis and Mech. Properties_____
To Chemical Analysis and Mech. Properties_____

Thickness Range:	PROCESS 1		PROCESS 2	
Base Metal	Groove 1/16 – 5/8”	Fillet_____	Groove_____	Fillet_____
Deposited Weld Metal	Groove 1/16-3/16”	Fillet_____	Groove_____	Fillet_____
Pipe Diameter Range	Groove_____	Fillet_____	Groove_____	Fillet_____

Other_____

FILLER METALS (QW-404)	PROCESS 1		PROCESS 2	
Specification No. (SFA)	5.9			
AWS No. (Class)	316/316L			
F-No.	6			
A-No.	8			
Size of Filler Metals	1/16”, 3/32”			
Deposited Weld Metal Thickness Range	Groove: 1/16 – 1/8”	Fillet:	Groove:	Fillet:
Electrode-Flux (Class)	N/A			
Flux Trade Name	N/A			
Consumable Insert				
Other:				

WELDING PROCEDURE SPECIFICATION
Specification No. SS-7

POSITIONS (QW-405)

Positions of Groove 1G
Welding Progression: Up ____ Down ____
Positions of Fillet ____

POSTWELD HEAT TREATMENT (QW-407)

Temperature Range None
Time Range N/A
Other ____

PREHEAT (QW-408)

Preheat Temperature Minimum 50F
Interpass Temperature Maximum 350F Max
Preheat Maintenance None
Minimum Temperature for Welding 32F

GAS (QW-408)

Percent Composition

	Gas(es)	Mixture	Flow Rate
Shielding	Argon	99.9%	15-20CFH
Trailing	None		

ELECTRICAL CHARACTERISTICS (QW-409)

Current AC or DC Direct Polarity Straight Characteristics: Non-pulsing
AMPS (Range) 80-250 Volts (Range) 12-20
Tungsten Electrode Size and Type 3/32" Diameter EWTH2
Mode of Metal Transfer for GMAW N/A
Electrode Wire Feed Speed Range N/A

TECHNIQUE (QW-410)

String or Weave Bead String or weave. Weave not to exceed 3/16"
Orifice or Gas Cup Size #5 or #6
Initial Interpass Cleaning (Brushing, Grinding, etc.) Initially solvent clean. Wire brush with stainless steel between passes.
Method of Back Gouging None
Oscillation N/A
Contact Tube to Work Distance N/A
Multiple or Single Pass (per side) Multiple
Multiple or Single Electrodes Single
Travel Speed (Range) As required.
Peening None
Other ____

Weld Layers	Processes	Filler Metal Class Diameter	Current		Volt Range	Travel Speed Range	Other (Power Source)
			Type Polarity	Amp Range			
1	GTAW	ER308 1/16"	DCSP	80-110	12-16	As Required	Use 3/32 EWTH2
2 thru final	GTAW	ER308 3/32"	DCSP	110-250	14-20	As Required	Use 3/32 EWTH2