ITEM	DESCRIPTION	QTY.REQD.	MATERIAL	SPECIFICATION
1	Ti-SMA-R	1		GMM-94374 LATEST
2	FLANGE	1	Ti	

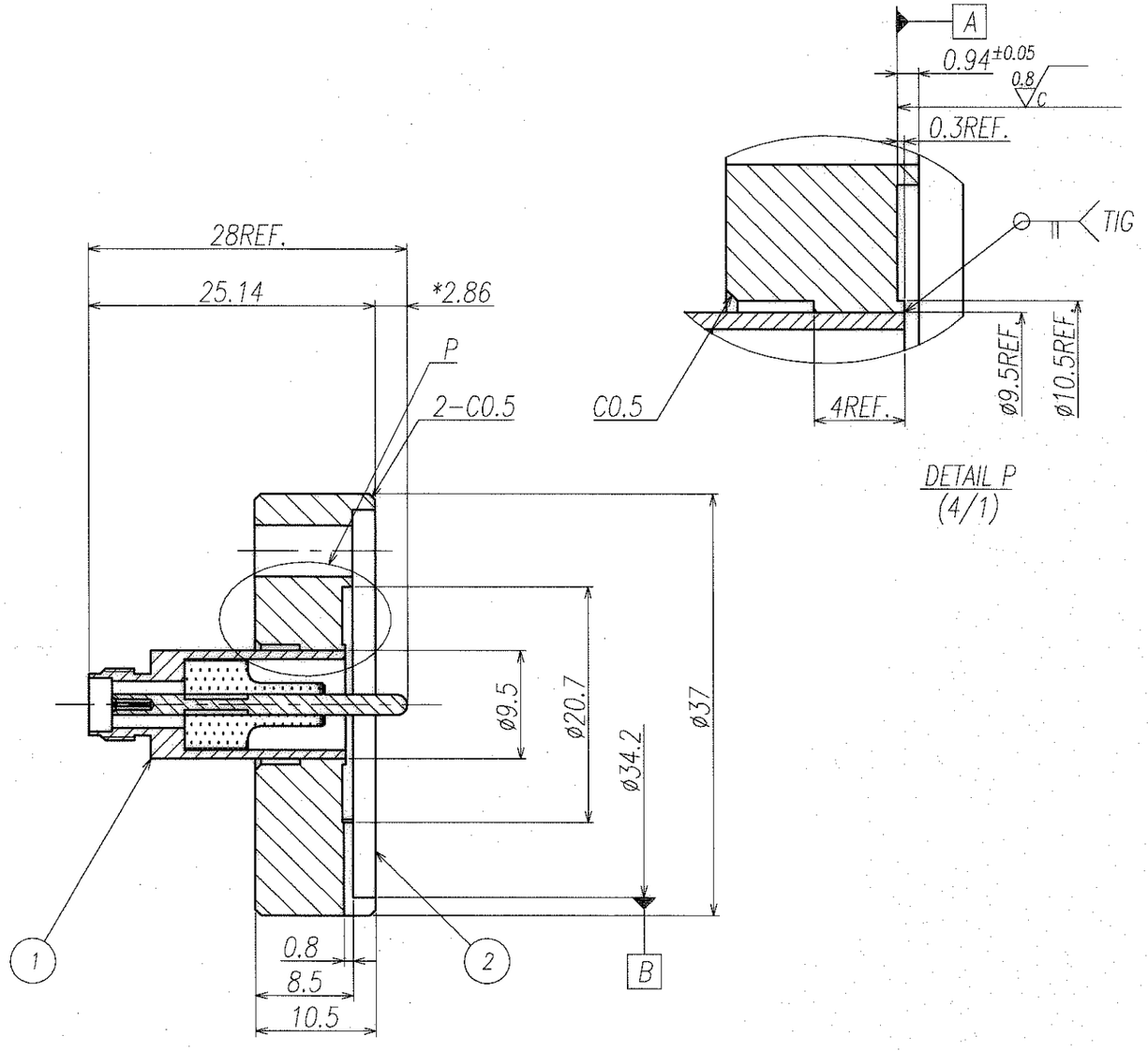

SECTION A-A'

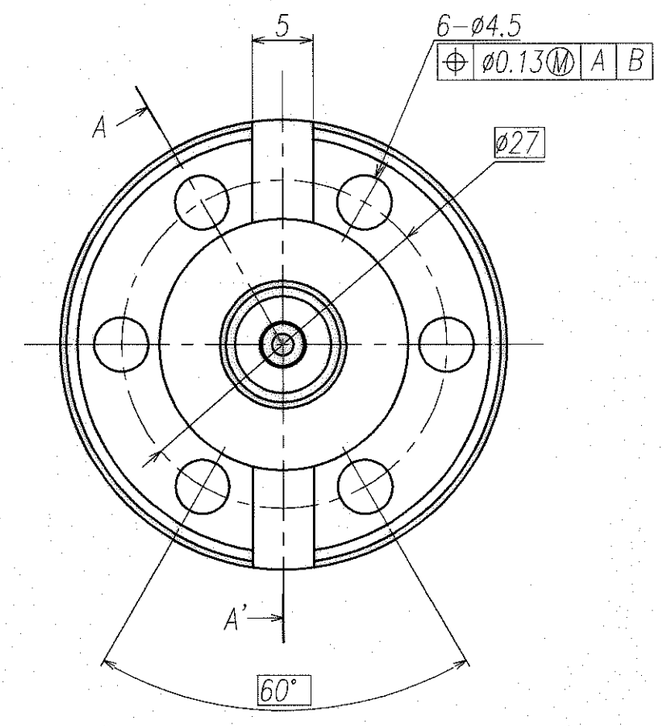

NOTES

1. HERMETICITY : 1.3X10 $^{-10}$ Pa·m^3/s ;He.
2. BAKEOUT TEMPERATURE 300°CMAX.
3. VOLTAGE D.C.1.0kV MAX.
4. ALL CORNERS TO BE CHAMFERED OR ROUNDED TO 0.3MAX.
5. MARKED * DIMENSIONS(1 PLACES) ARE MEASURED AT QA SECTION.
6. ALL DIMENSIONS ARE IN MILLIMETERS.
7. OTHER SPECIFICATION : "MES-2001"

KYOCERA	SCALE	CUSTOMER	NAME	
	2:1	FERMI LAB / CUSTOMER DWG	Ti-SMA-R+NW12 FLANGE	UNITS mm
APPROVED	CONFIRMED	CONFIRMED	CONFIRMED	DRAWN
May. 11.'07	May. 11.'07	May. 11.2007	May. 11.2007	May. 11.'07
				TOLERANCES: UNLESS OTHERWISE SPECIFIED ±0.5
				DWG No. GMM-A7131

ALL RIGHTS RESERVED. DISCLOSURE OR COPYING OF THIS DOCUMENTS, USE AND COMMUNICATION OF ITS CONTENTS NOT PERMITTED WITHOUT WRITTEN AUTHORIZATION FROM KYOCERA

ITEM No.	DESCRIPTION	QTY.REQD.	MATERIAL	SPECIFICATION
1	CERAMIC	1	Al_2O_3	KYOCERA A473
2	PIN	1	Ti	
3	SLEEVE	1	Ti	

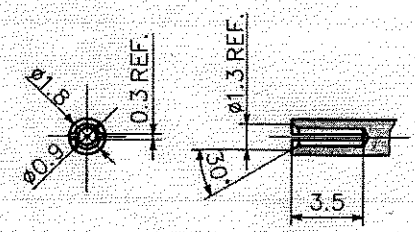

DETAIL "P" (4/1)

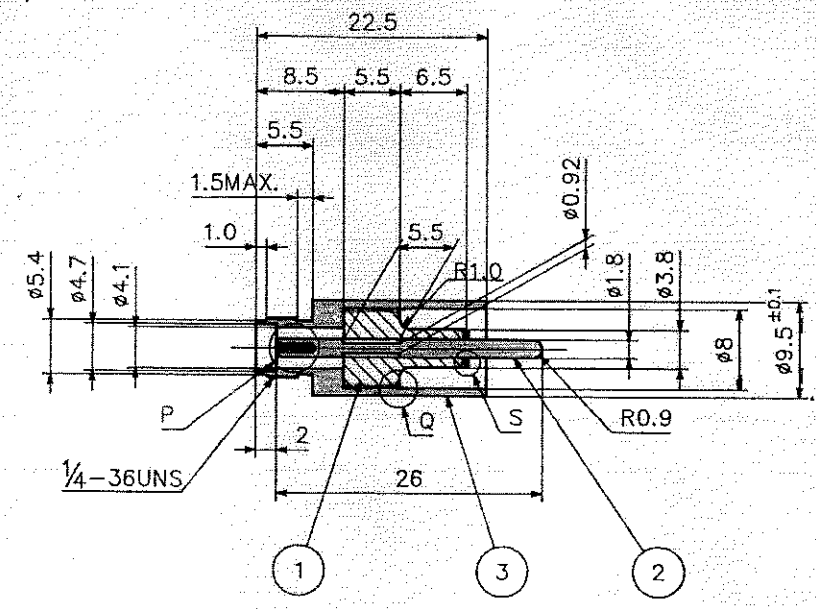

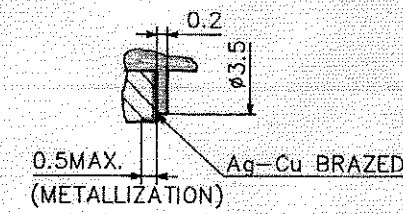

DETAIL "S" (10/1)

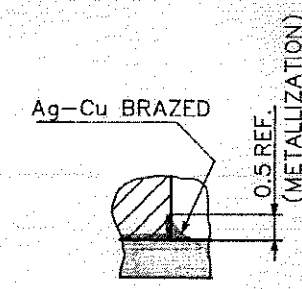

DETAIL "Q" (10/1)

NOTES

1. HERMETICITY 1.3×10^{-10} Pa・m³/sec.(1.0×10^{-9} Torr・l/sec.)He
2. VOLTAGE D.C.1.0kV MAX.
3. BAKEOUT TEMPERATURE 300°C MAX.
4. ALL DIMENSIONS ARE IN MILLIMETERS.
5. ▬ SHADED AREAS OF ① SHOW METALLIZATION(Mo-Mn + Ni PLATING).

MODIFICATIONS				
CHANGE	DATE	DRAWN	CHECKED	APPROVED

COMPANY: K/C STANDARD

NAME: Ti-SMA-R

SCALE: 2 / 1

MATERIAL: AS INDICATED

DWG. No.

TOLERANCES: UNLESS OTHERWISE SPECIFIED ±0.5

DRAWN	CHECKED
H. Ikeuto	Y. Ushio
APPROVED	APPROVED
T. Matsuoka	N. Mitani

KYOCERA CORPORATION KYOTO JAPAN

DATE: AUG.2.'94

DWG. No. GMM-94374