My first 8 months at the Technical Division

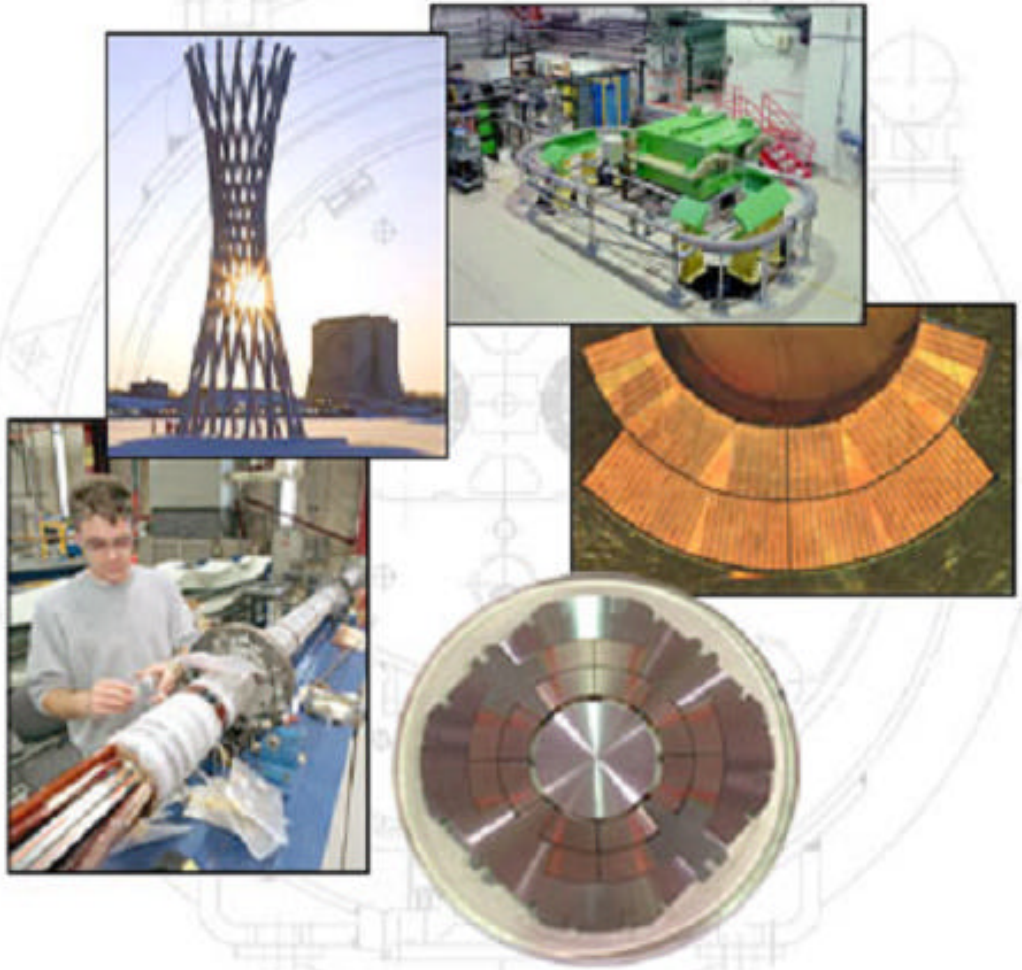

Nice to be back: Outline

- ICW for new vacuum furnaces in IB4
- Girders
- Tesla report
- Transformer to test splices
- BCP
- LC group web pages
- Displays in ICB

ICW in IB4

-1-

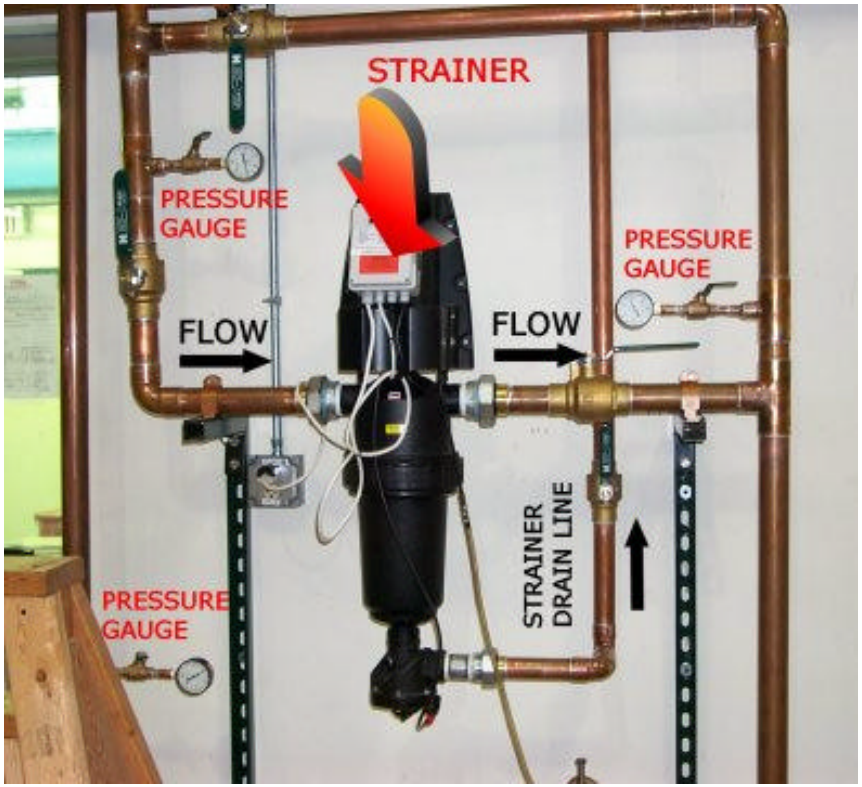

- 40 psi working pressure
- 35 gpm to big furnace
- 10 gpm to small furnace
- 25 gpm to chiller

ICW in IB4

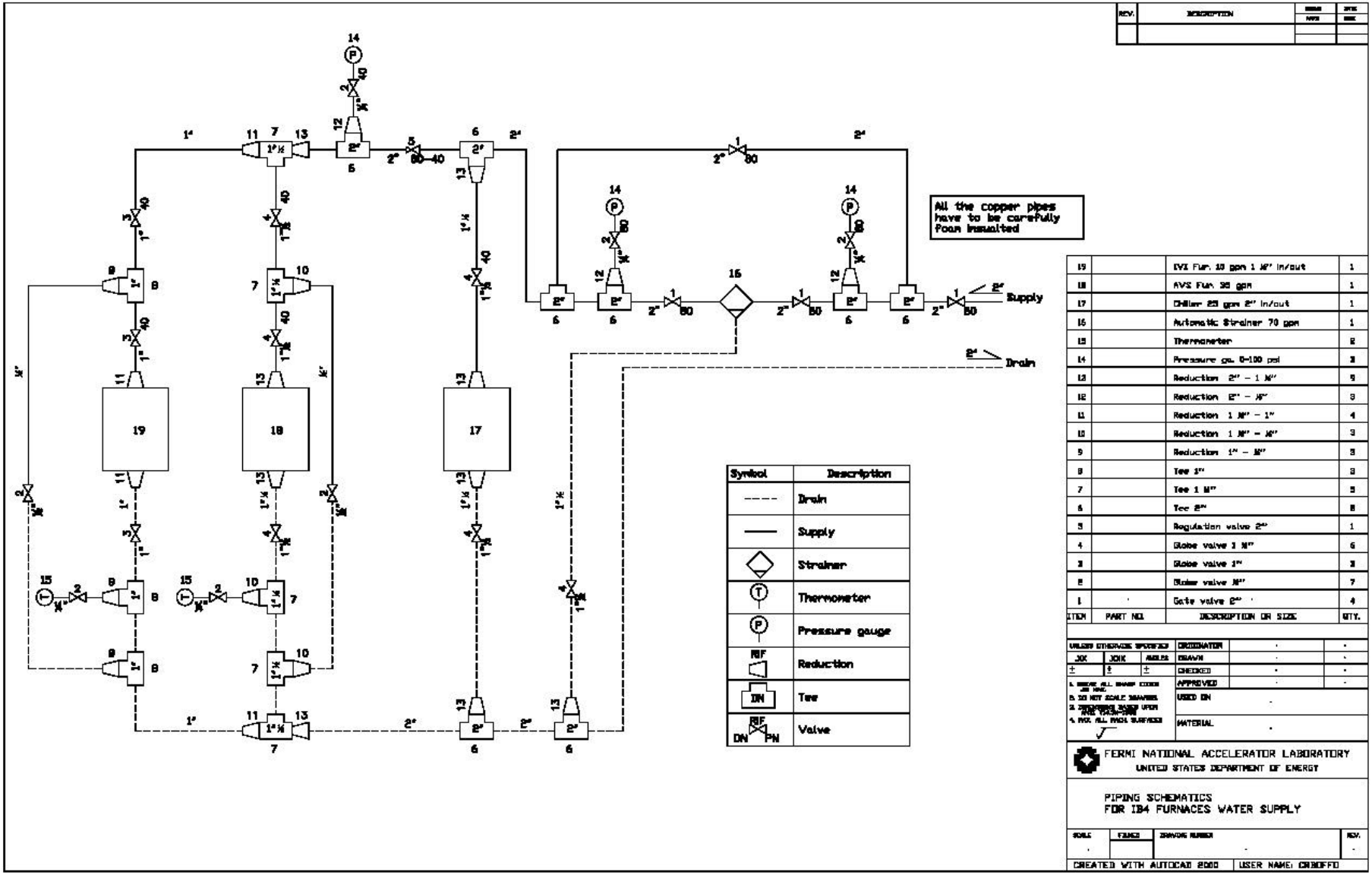
All the copper pipes have to be carefully foam insulated
Supply
Drain
Symbol
Description
Drain
Supply
Strainer
Thermometer
Pressure gauge
Reduction
Tee
Valve
ITEM
PART NO.
DESCRIPTION OR SIZE
QTY.
FERMI NATIONAL ACCELERATOR LABORATORY
UNITED STATES DEPARTMENT OF ENERGY
PIPING SCHEMATICS
FOR IB4 FURNACES WATER SUPPLY
CREATED WITH AUTOCAD 2000

Outline

- ICW for new vacuum furnaces in IB4
- Girders
- Tesla report
- Transformer to test splices
- BCP
- LC group web pages
- Displays in ICB

What is a Girder?

Moving supports for accelerating structures to be used in NLC

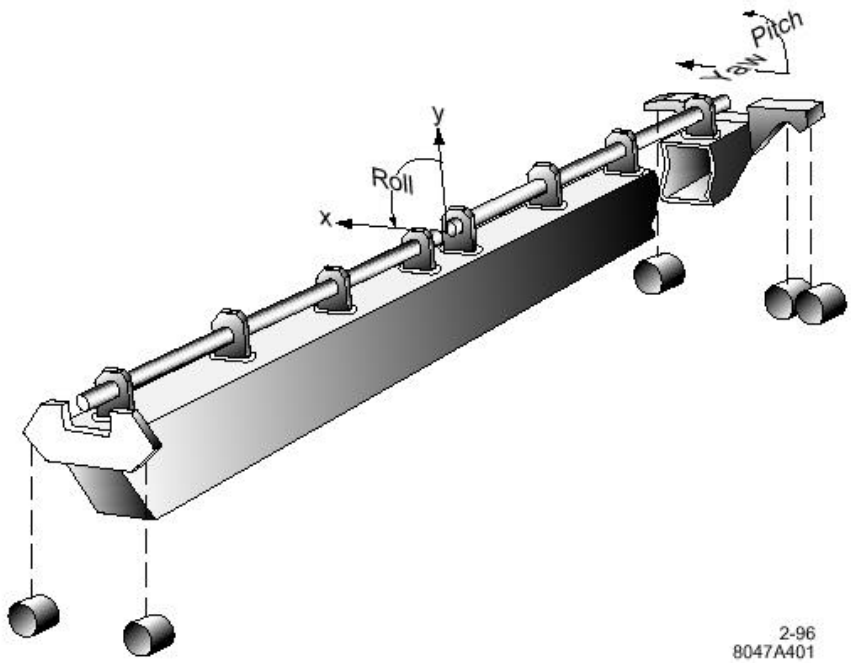

Why Girders?

1 Structure (5 points best fit curve) short wavelength:

- +/- 200µm horizontal
- +/- 50µm vertical

By structure itself

6 structures on girder (30 points best fit curve) long wavelength:

- +/- 200µm horizontal
- +/- 100µm vertical

GOALS:

- Structure on spaceframe positioned with +/- 10 µm tolerances
- Spaceframes on girders positioned with +/- 100 µm tolerances
- Girder positioning to beam

Who designed Girders?

- **Linear colliders:**
  - **NLC**
  - **CLIC**
  - **SLC**
- **Synchrotron light sources**
  - **SLS (Swiss Light Source – Switzerland)**
  - **APS (Advanced Photon Source – ANL)**
  - **ESRF (European Synchrotron Radiation Facility – France)**
  - **SPRING 8 (Super Photon RING 8 GeV –Japan)**

Comparison

	NLC FFTB	CLIC CTF2	SLS	APS	ESRF
DOF	3	3	5	3	3
GIRDERS			48		96
SYSTEM	3 Cams	3 Jacks	5 Cams	Jacks	Jacks
MOTION RANGE	+ / - 1 mm	+ / - 5 mm	+ / - 2 mm		
POSITIONING ACCURACY	5mm	10 mm	3 mm	*+ / - 150 mm relative pos*	*10 mm rel. 100 mm Km*
POSITION CONTROL	Pots LVDT BPM	HLS TILTmeter BPM	HLS HPS Dig encoder BPM		HLS Plates
ALIGNMENT ON GIRDER	LVDTs CMM		Laser interf. CMM		Laser interf.
ELEMENTS ON GIRDERS	magnets	magnets	magnets	magnets	magnets
MOTORS	Stepping Harm. drive	Stepping	Motor warm Planetary		

SLAC design

- **Alignment:**
  - **CMM**
  - **Fresnel zone plates and CCD camera (10 mm over 35 m)**
  - **Laser trackers (10 mm resolution)**
  - **Fiducials (3 mm repeatability)**
  - **LVDTs (5 mm resolution)**

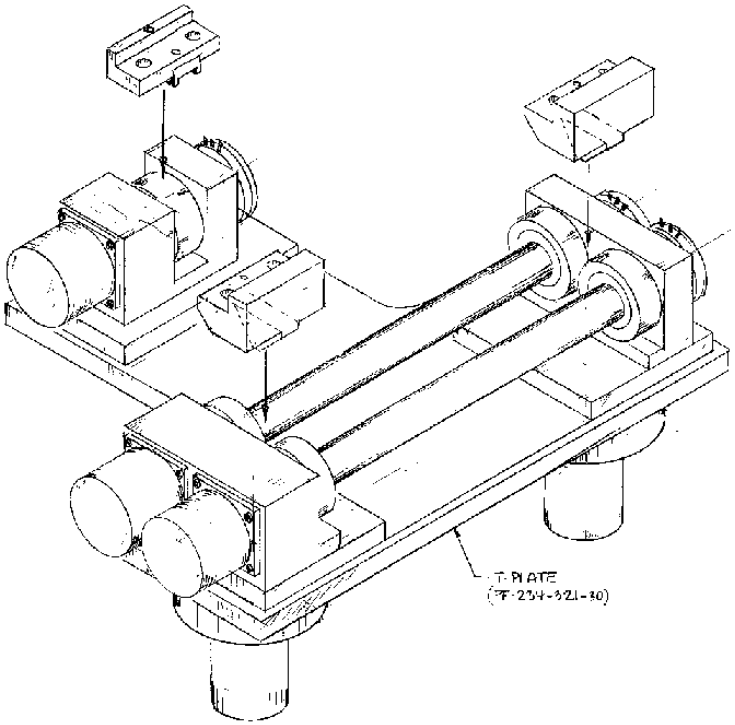

SLS Upgrade

- **Alignment:**
  - **Laser interferometer**
  - **CMM**
  - **HLS (+/- 3 mm repeatability)**
  - **HPS (+/- 1 mm repeatability)**

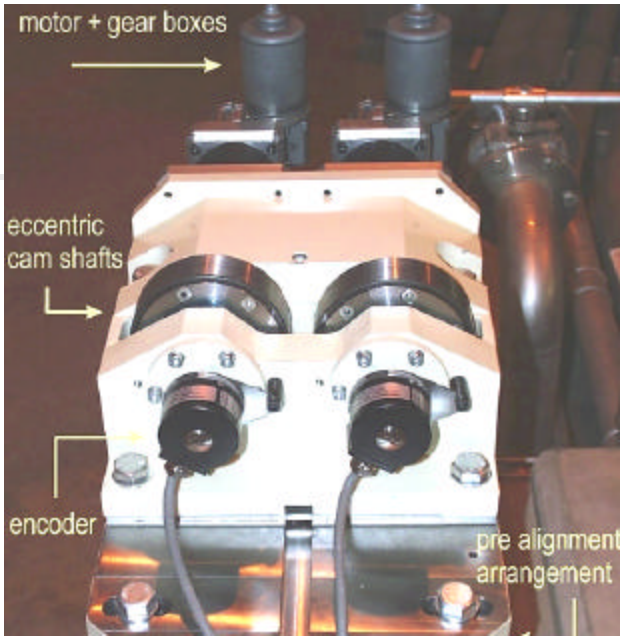

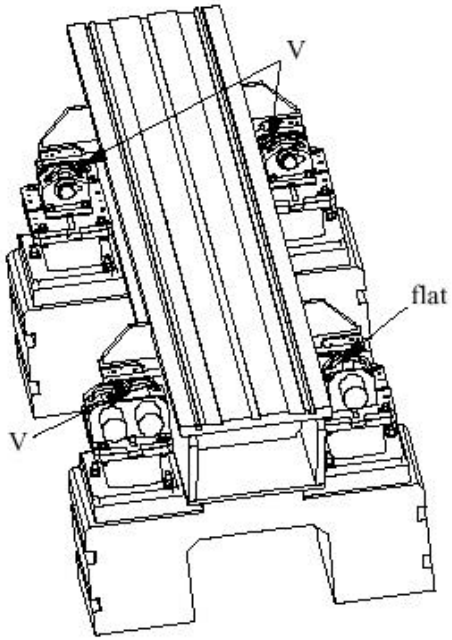

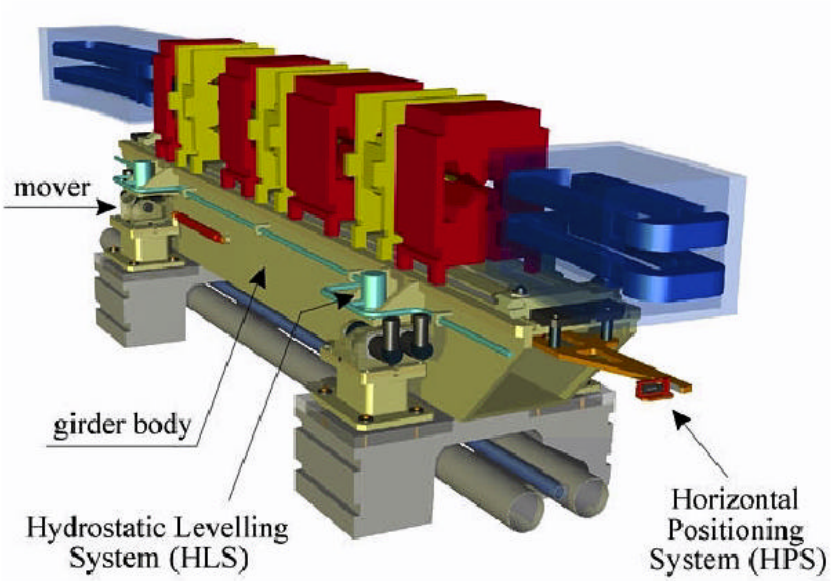

Design

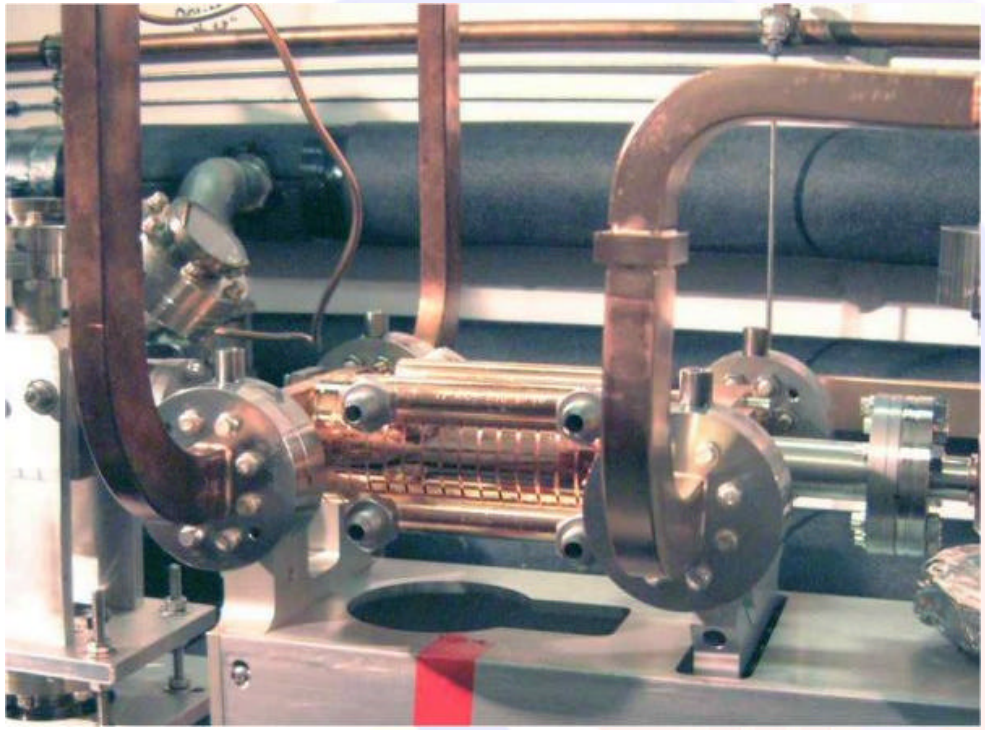

- Self weight distortion
- Thermal dilatation
- Micro Creep
- …

Self weight -1-

- **The presence of brazing material is not affecting the mechanical behavior of the structure.**

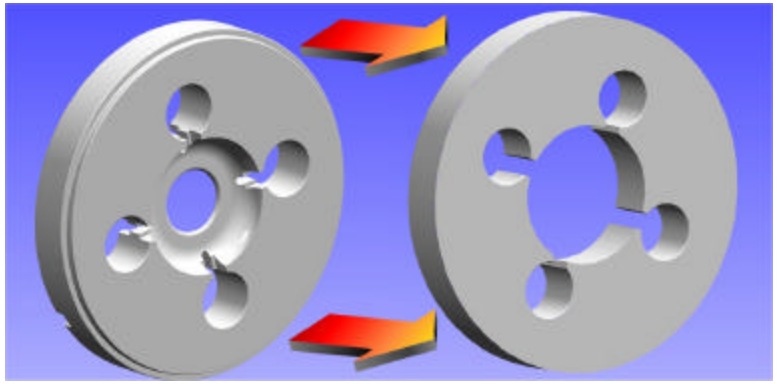

- **Nicoro-80 by Wesgo Metals. yield strength of 372 MPa and a thermal coefficient of expansion of about 17.8 x 10^{-6} C^{-1}**

- **61 mm RDDS disks**

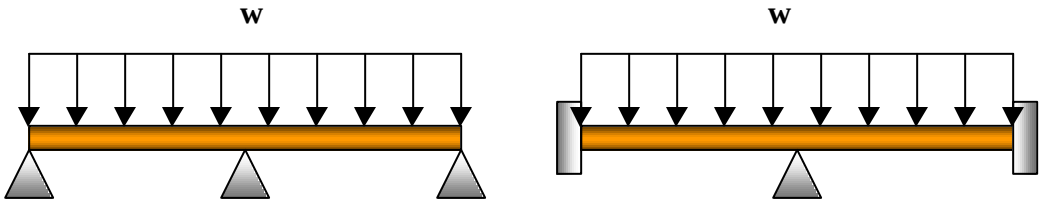

Model 1 **Model 2**

Self weight -2-

$$EJv^{iv} = w$$

$$v = \frac{1}{EJ}\left(\frac{wl^4}{24} + az^3 + bz^2 + cz + d\right)$$

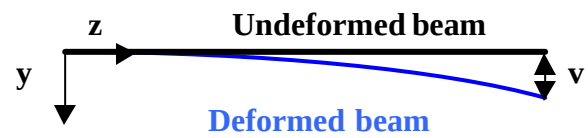

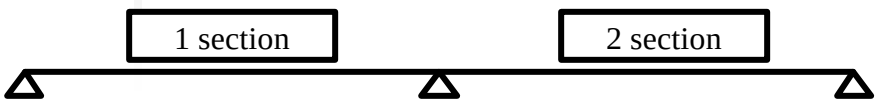

Start section 1	*Connection*	*End section 2*
$v_1=0$	$v_1=0$	$v_2=0$
$v^{ii}_1=0$	$v_2=0$	$v^{ii}_2=0$
	$v^{i}_1= v^{i}_2$	
	$v^{ii}_1= v^{ii}_2$	

$$v = \frac{1}{EJ}\left(\frac{wz^4}{24} - \frac{wlz^3}{16} + \frac{wl^3z}{48}\right)$$

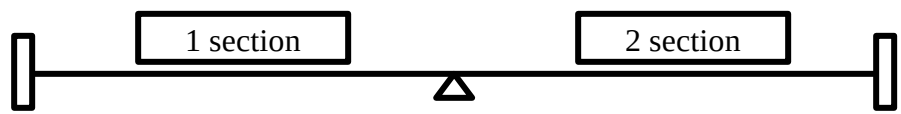

Start section 1	*Connection*	*End section 2*
$v_1=0$	$v_1=0$	$v_2=0$
$v^{i}_1=0$	$v_2=0$	$v^{i}_2=0$
	$v^{i}_1= v^{i}_2$	
	$v^{ii}_1= v^{ii}_2$	

$$v = \frac{1}{EJ}\left(\frac{wz^4}{24} - \frac{wlz^3}{12} + \frac{wl^2z^2}{24}\right)$$

Self weight

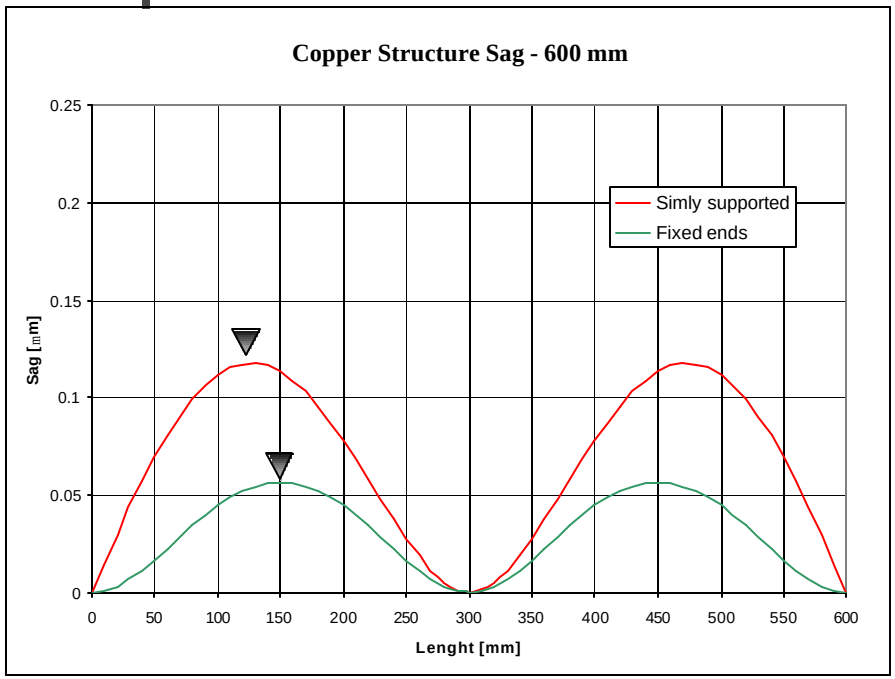

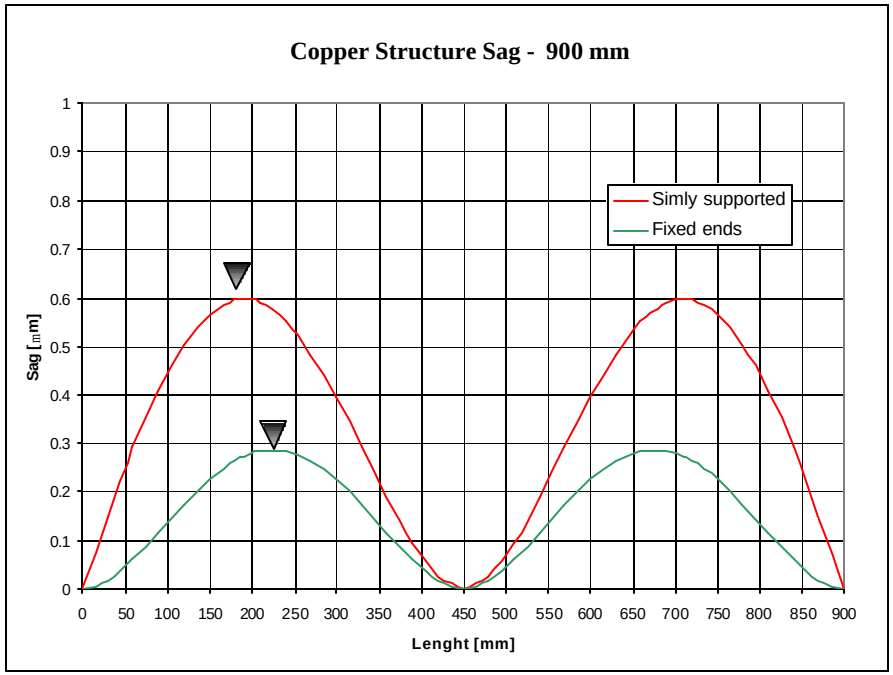

	600 mm [μm]	900 mm [μm]
Fixed ends	~ 0.06	~ 0.30
Simple ends	~ 0.12	~ 0.60

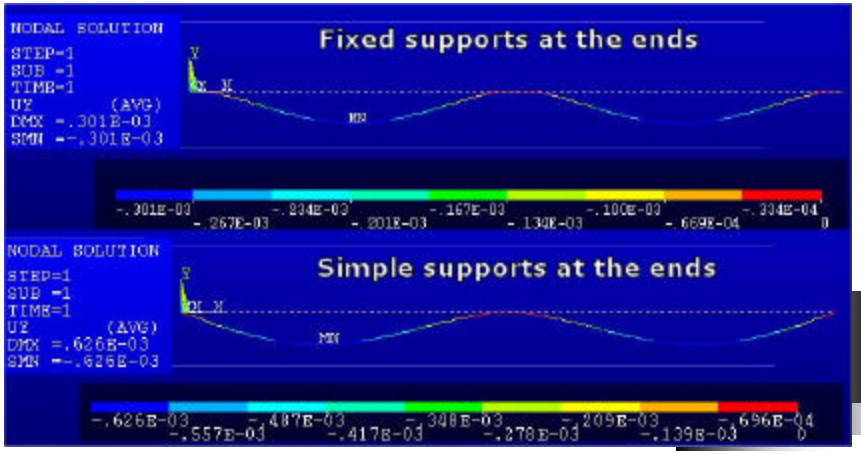

Thermal dilatation & Creep

ΔT 25 [C]	Expansion 600 [μm]	Expansion 900 [μm]
Cu	204	306
Al	288	432

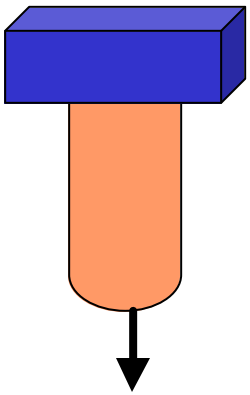

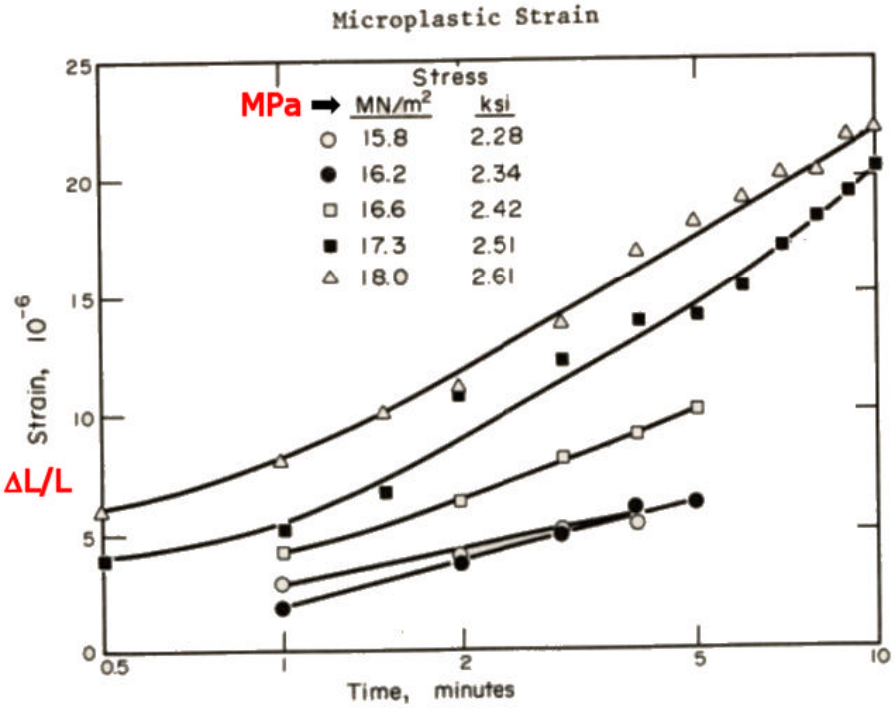

900 mm	18 μm
600 mm	12 μm

NLCTA

Eight-Pack Project Structures in NLCTA

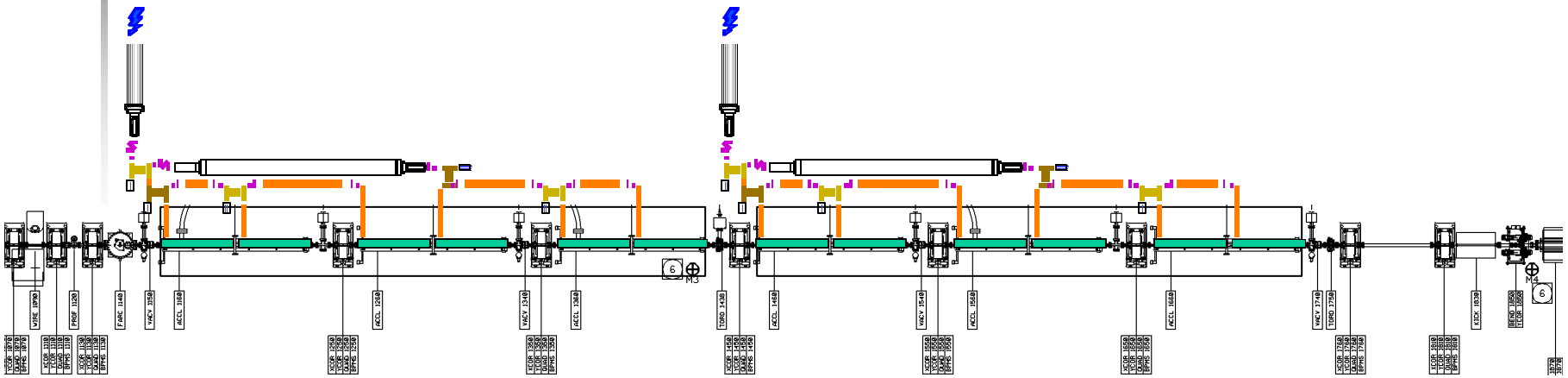

Second Girder Installed

First Girder Installed
(Feed by Long Delay Line)

First Support

- First task in the development of girders is the design of the supports for our first structure (FXB001) that will be tested in NLCTA next summer

- No moving parts, no tight tolerances

- Reduced dimensions in order to fit NLCTA space constrains

- Maximum of two structures per support

Outline

- ICW for new vacuum furnaces in IB4
- Girders
- Tesla report
- Transformer to test splices
- BCP
- LC group web pages
- Displays in ICB

Tansformer

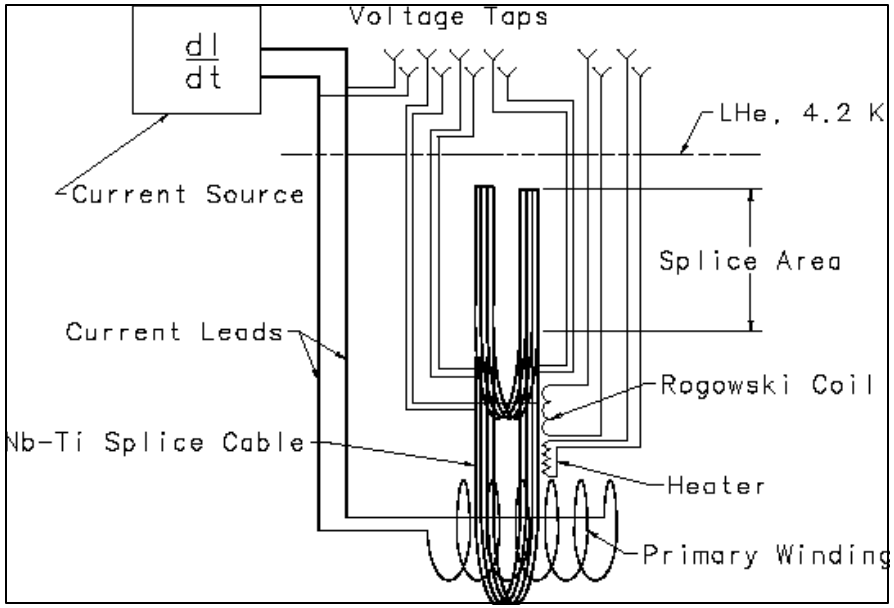
dI/dt
Voltage Taps
LHe, 4.2 K
Current Source
Splice Area
Current Leads
Rogowski Coil
Nb-Ti Splice Cable
Heater
Primary Winding

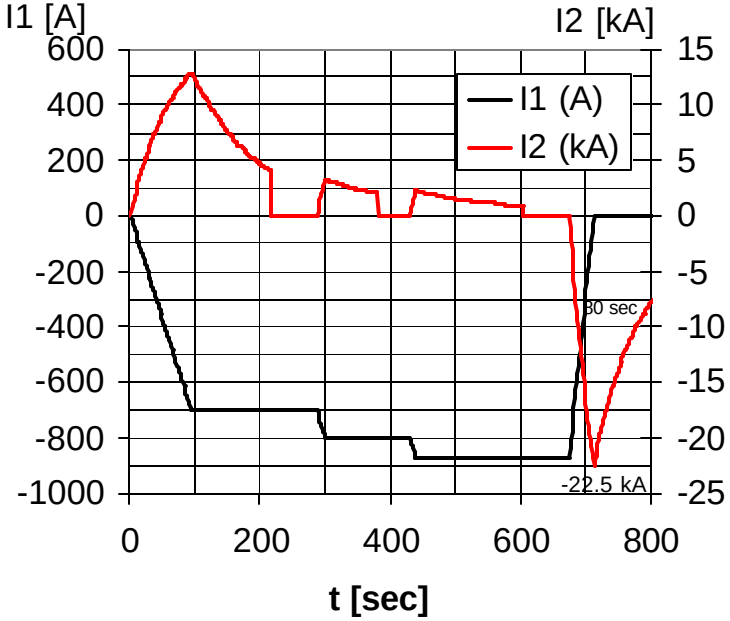
I1 [A]
I2 [kA]
600
400
200
0
-200
-400
-600
-800
-1000
15
10
5
0
-5
-10
-15
-20
-25
I1 (A)
I2 (kA)
30 sec
-22.5 kA
0
200
400
600
800
t [sec]

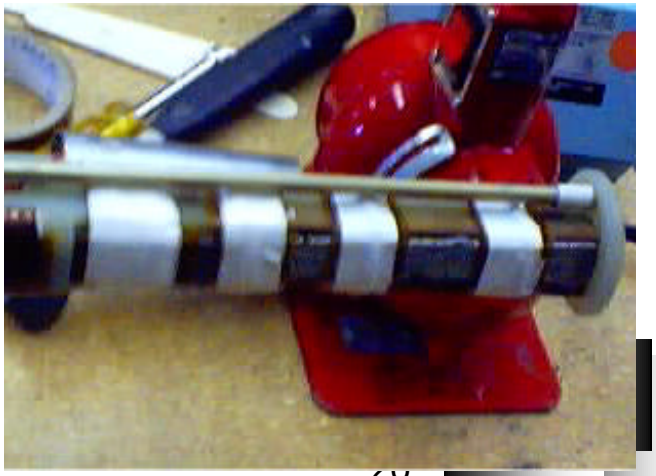

Tansformer DAQ

Critical current:

- Voltage taps
- Current ramping
- Temperature meters
- Measurement protection

Magntization:

- Integrated signal
- He level meter

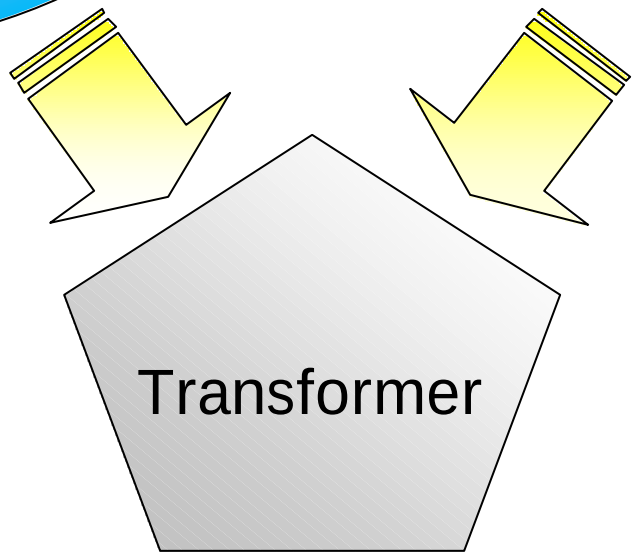

Tansformer DAQ

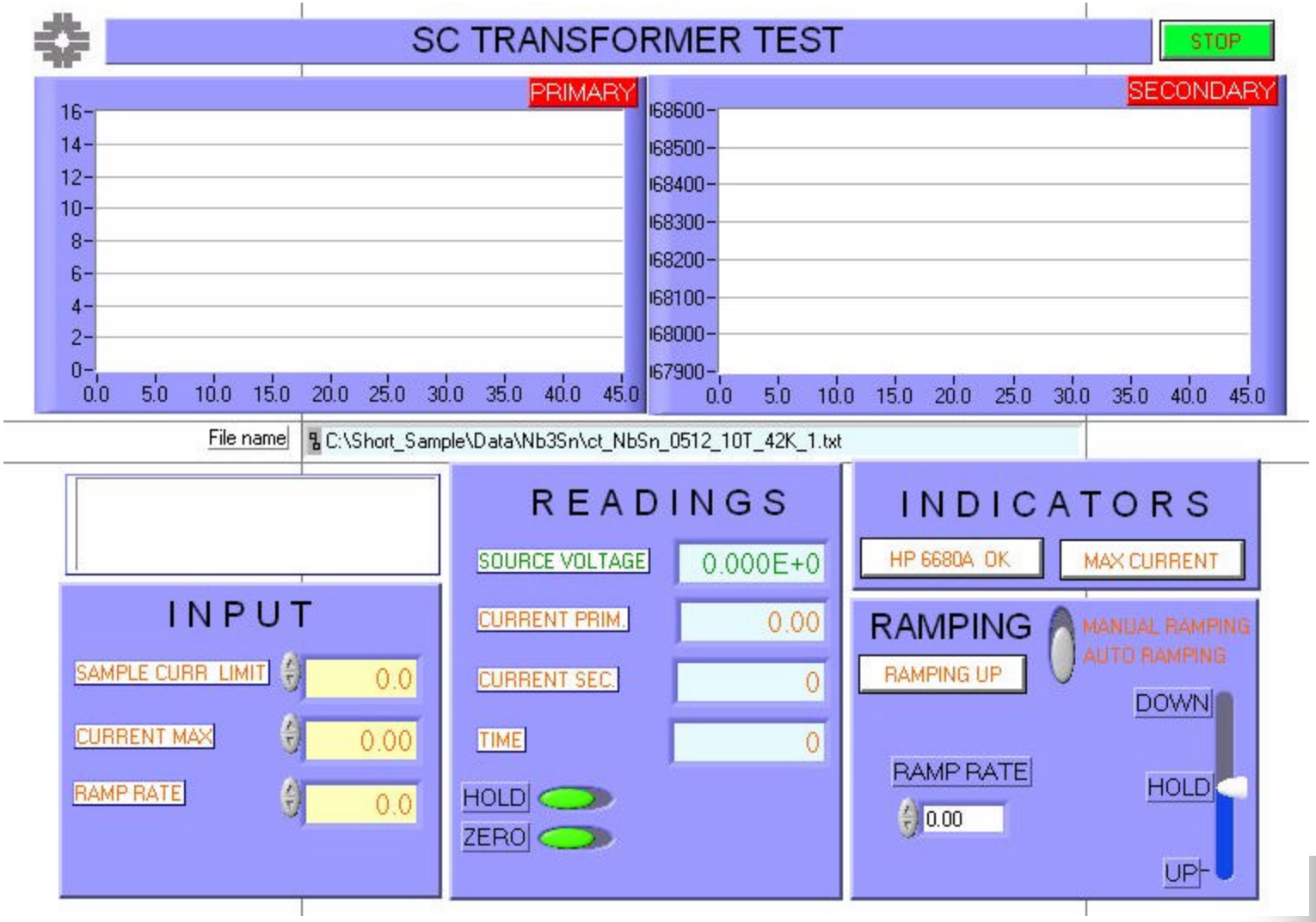

Outline

- ICW for new vacuum furnaces in IB4
- Girders
- Tesla report
- Transformer to test splices
- BCP
- LC group web pages
- Displays in ICB

Chemical polishing of SCRF

To obtain optimal performances in a SC resonator, it is necessary to chemically etch away a considerable surface layer of ~ 100 μm

Buffered chemical polishing
1:1:2 HF (48%) HNO_3 (68%) H_3PO_4 (85%)

$$2\ Nb + 10\ HNO_3 \rightarrow Nb_2O_5 + 10\ NO_2 + 5\ H_2O$$

$$Nb_2O_5 + 10\ HF \rightarrow 2\ NbF_5 + 5\ H_2O$$

$$Nb + 5\ HNO_3 + HF \rightarrow NbF_5 + 5\ NO_2 + 5\ H_2O$$

$$H_3PO_4 \text{ <--> } H^+ + H_2PO_4^-$$

Chemical polishing of SCRF

Max Nb in solution 16 g/l → 25 l of mix for 100 mm

100 mm → 300 lit of NO_2 produced in 50 minutes

100 mm → 300 W of heat produced in 50 minutes

Amount of Nb has to be monitored and temperature kept constant in order to control the reaction at a rate of 2 μm per minute @ 20 C

$$Nb + 5\ HNO_3 + HF \rightarrow NbF_5 + 5\ NO_2 + 5\ H_2O$$

BCP Facility –front view-

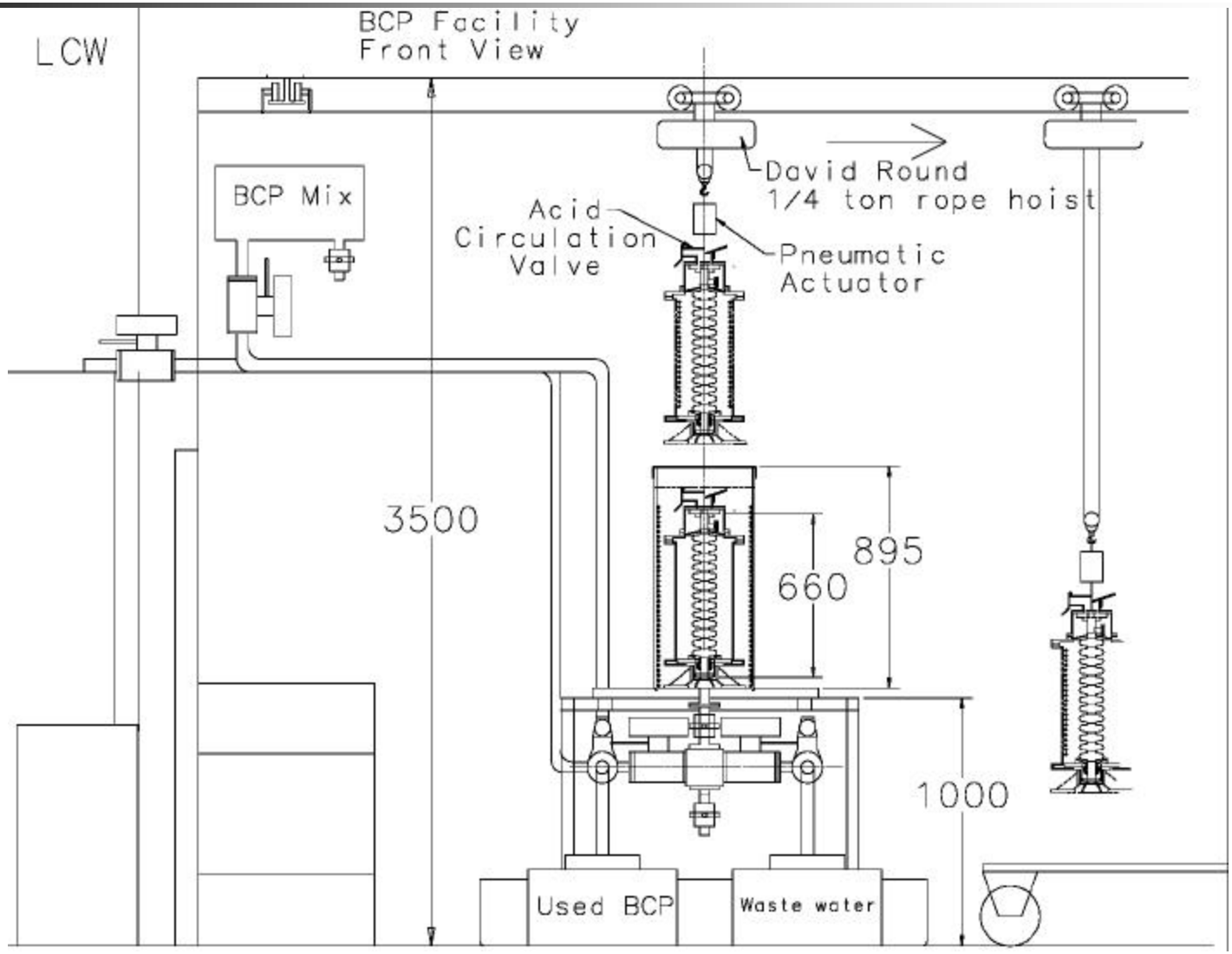

BCP Facility –plan view-

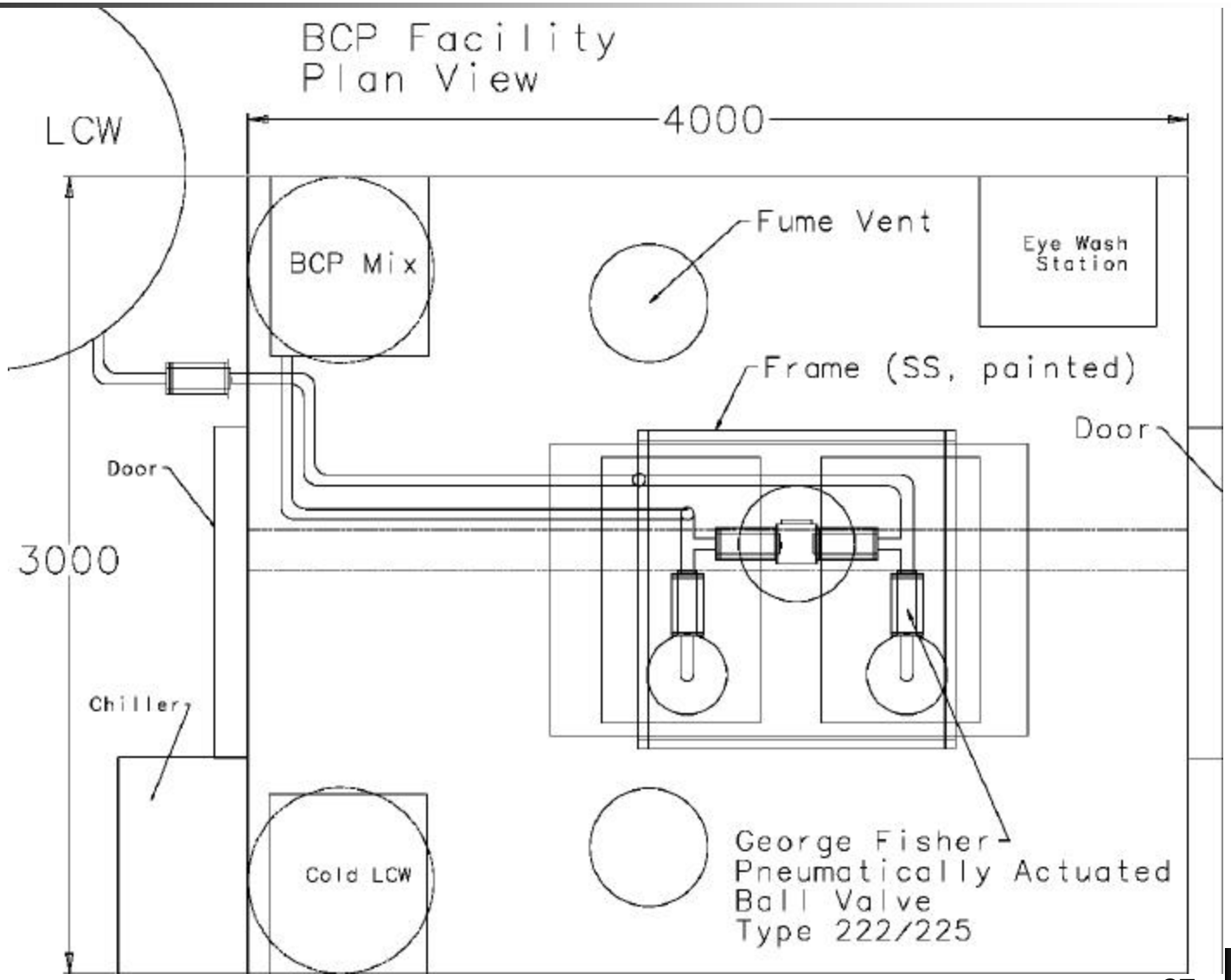

Jacket for resonator

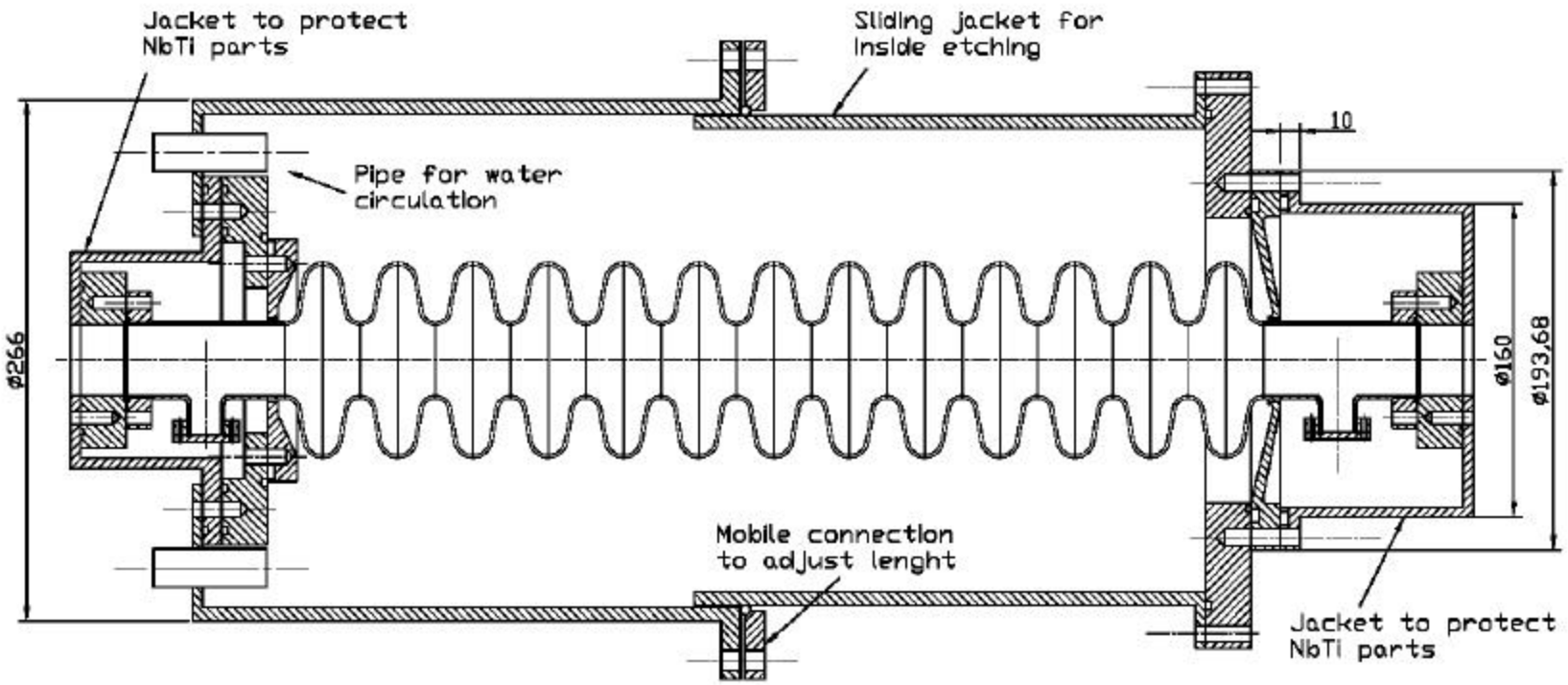

All parts are PVDF.
The sliding jacket is removed during external etching.
During internal etching the jacket is filled with water.
During external etching the resonator is filled with water.
O-rings are to be replaced after every assembling operation.

Outline

- ICW for new vacuum furnaces in IB4
- Girders
- Tesla report
- Transformer to test splices
- BCP
- LC group web pages
- Displays in ICB

LC Group Web Site

Just Click here:

http://www-td.fnal.gov/lc/intro.html

LC Group Web Site: Statistics

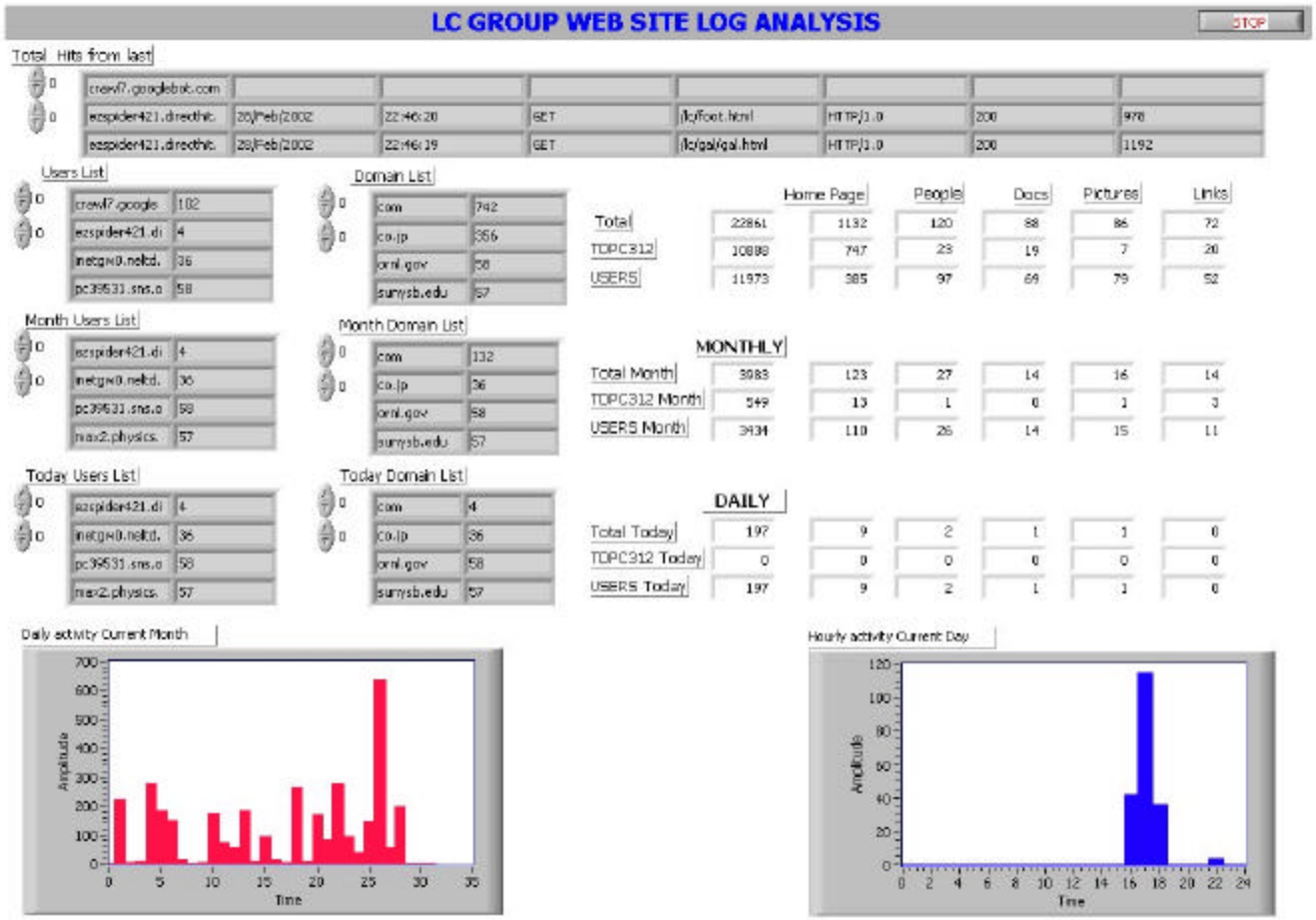

LC Group Web Site: Statistics

	Total	Fnal	Labs	Edu	Com	Crawl	X day
Nov	2703	1828	288	0	127	460	90.1
Dec	2810	1270	358	162	753	267	100.4
Jan	2961	1659	191	269	412	430	105.8
Feb	3434	1958	586	366	167	357	122.6
ToT	11908						

	Total	Home	People	Docs	Pictures	Links	Intro	LC3	Tutorial	X day
Nov	241	82	22	15	16	10	81	15	0	8.0
Dec	306	93	29	23	25	14	89	17	16	10.9
Jan	291	94	19	17	23	17	83	15	23	10.4
Feb	292	110	26	14	15	11	74	3	39	10.4
ToT	1130									

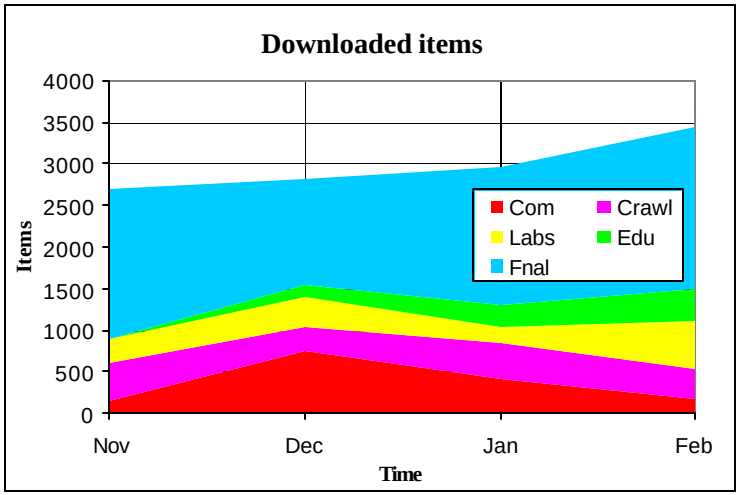

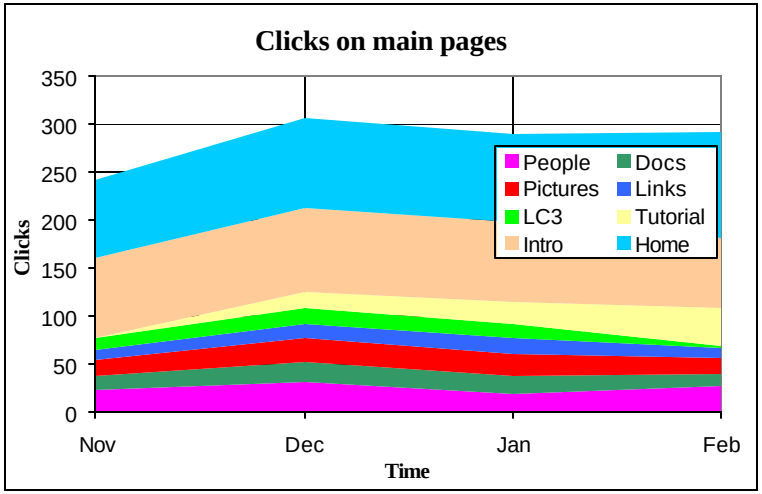

Kiosk interface

- Display for the linear collider group
- Kiosk

http://tdserver1.fnal.gov/public/boffo/td01.swf

Conclusion

Why conclusion?
It is not much but
this is just the beginning!!!