US LHC ACCELERATOR PROJECT

*brookhaven - **fermilab** - berkeley*

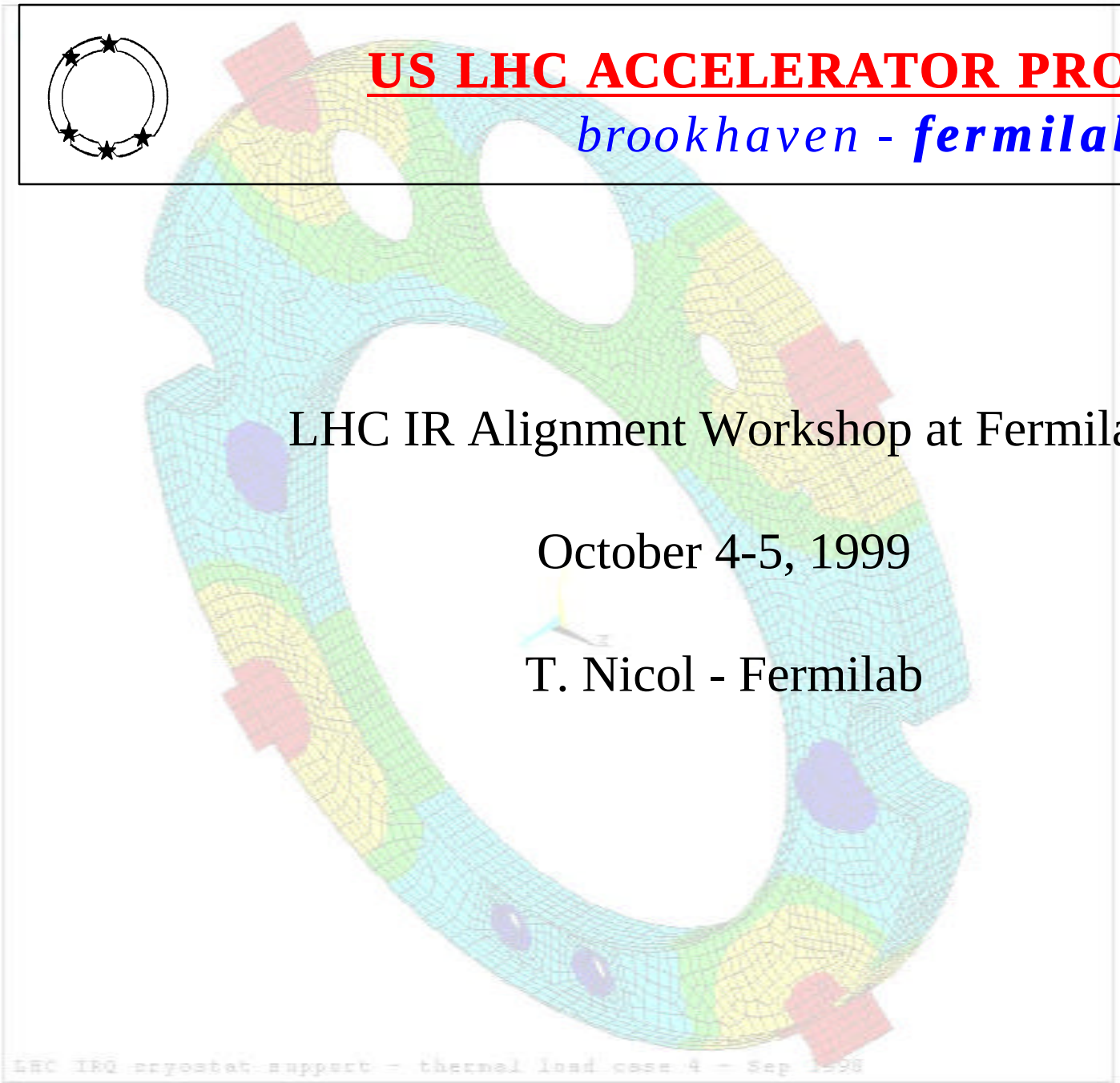

LHC IR Alignment Workshop at Fermilab

October 4-5, 1999

T. Nicol - Fermilab

Summary

The cryostat consists of all parts of the completed magnet with the exception of the cold mass itself. As such it serves as the system which defines the warm and cold positions of the cold mass, provides the structural supports to resist shipping, handling, and operational loads (some may be permanent, some temporary), provides the features for measuring the position of the cold mass, and provides the features for aligning the cold mass in the experimental halls.

Questions

- How well do we need to determine the magnetic position with respect to the outside fiducials and how well can we do it?
- How well do we need to align the Q2a and Q2b cold masses with respect to each other and how well can we do it?
- How repeatable should the warm-to-cold mechanical movement be from magnet to magnet?
- How much permanent movement of the warm position is acceptable during shipping and handling?
- What kind of structures do we need to design and build in addition to the magnets to ensure their mechanical integrity during shipping?
- How do we determine the magnetic position after shipping, i.e. at CERN?

Topics for discussion

- Status of the cryostat design.
- Cold mass to suspension system interface.
- Final assembly concept.
- Deflection analysis results.
- Preliminary alignment fiducial mounting and location.
- Q2a/Q2b weld fixture and test.
- Short term plans (alignment related).

US LHC ACCELERATOR PROJECT

*brookhaven - **fermilab** - berkeley*

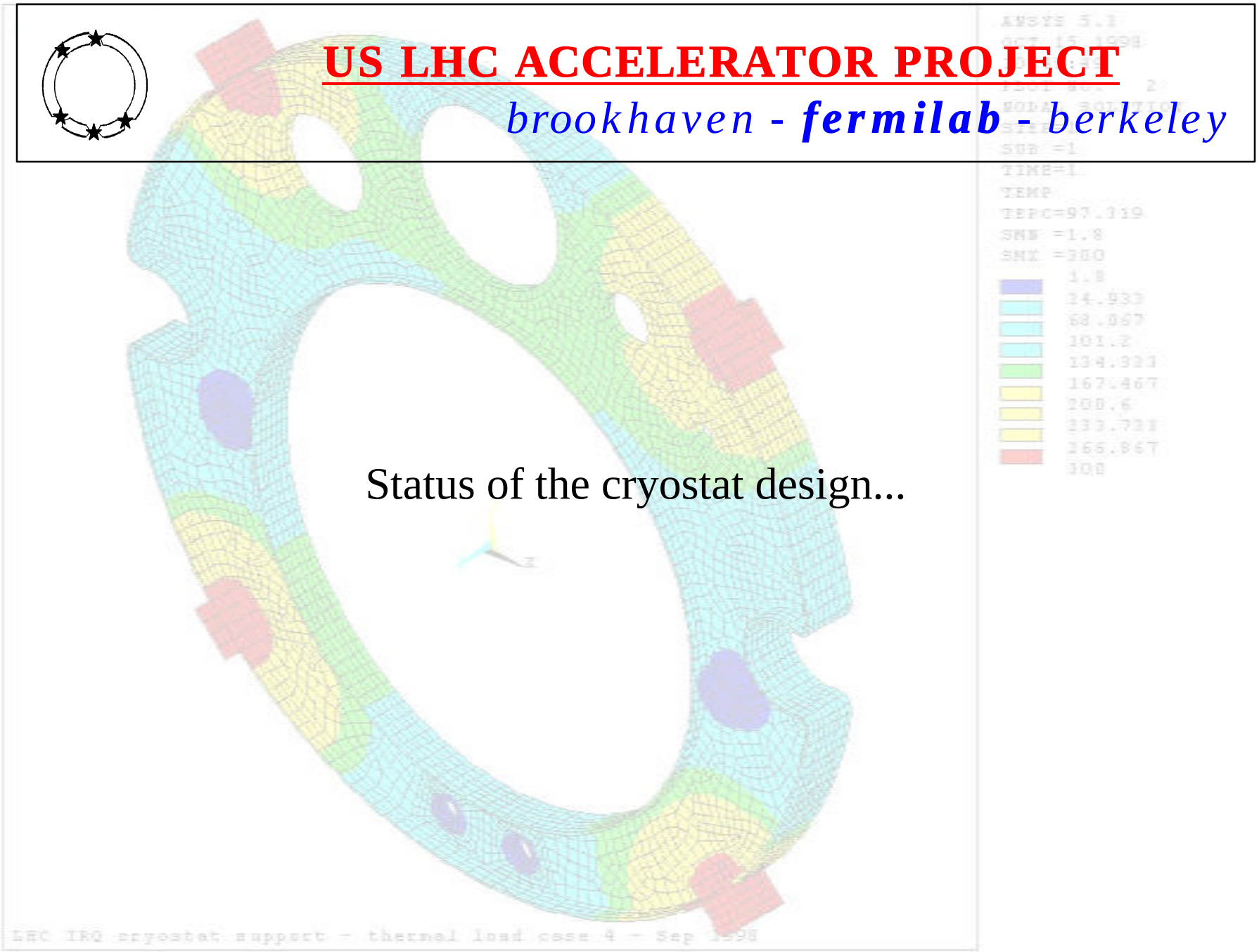

Status of the cryostat design...

Current Q1 cryostat conceptual design

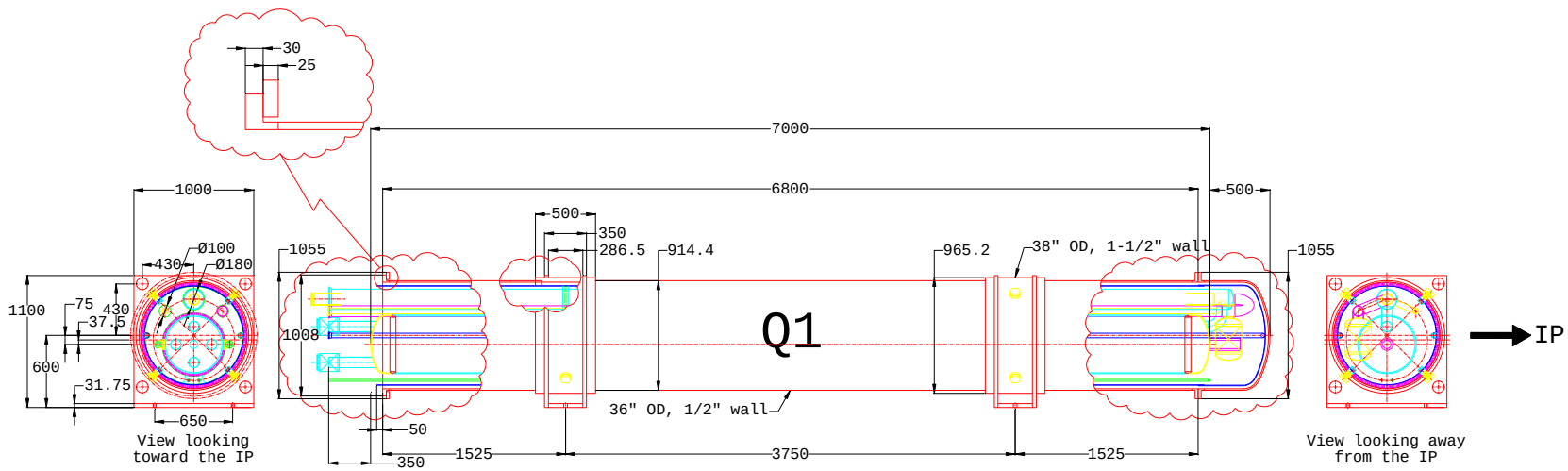

Q1 internal piping assembly

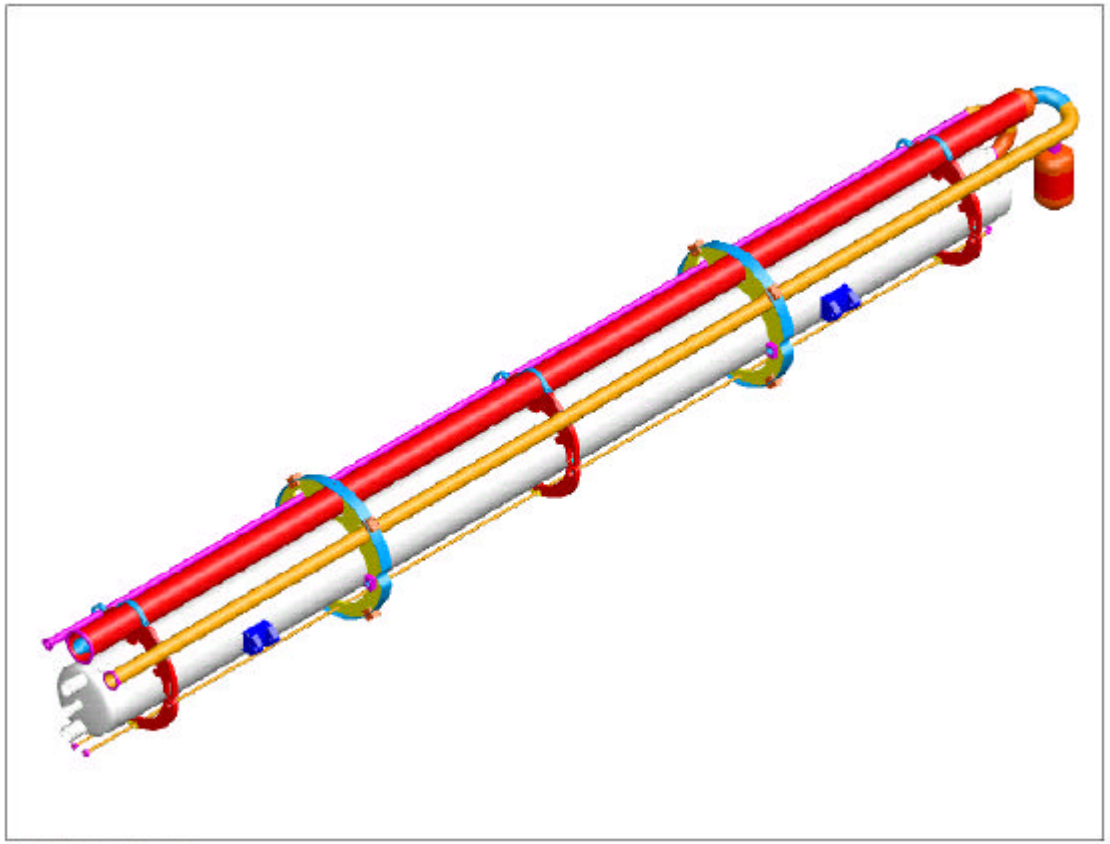

Piping support design concept

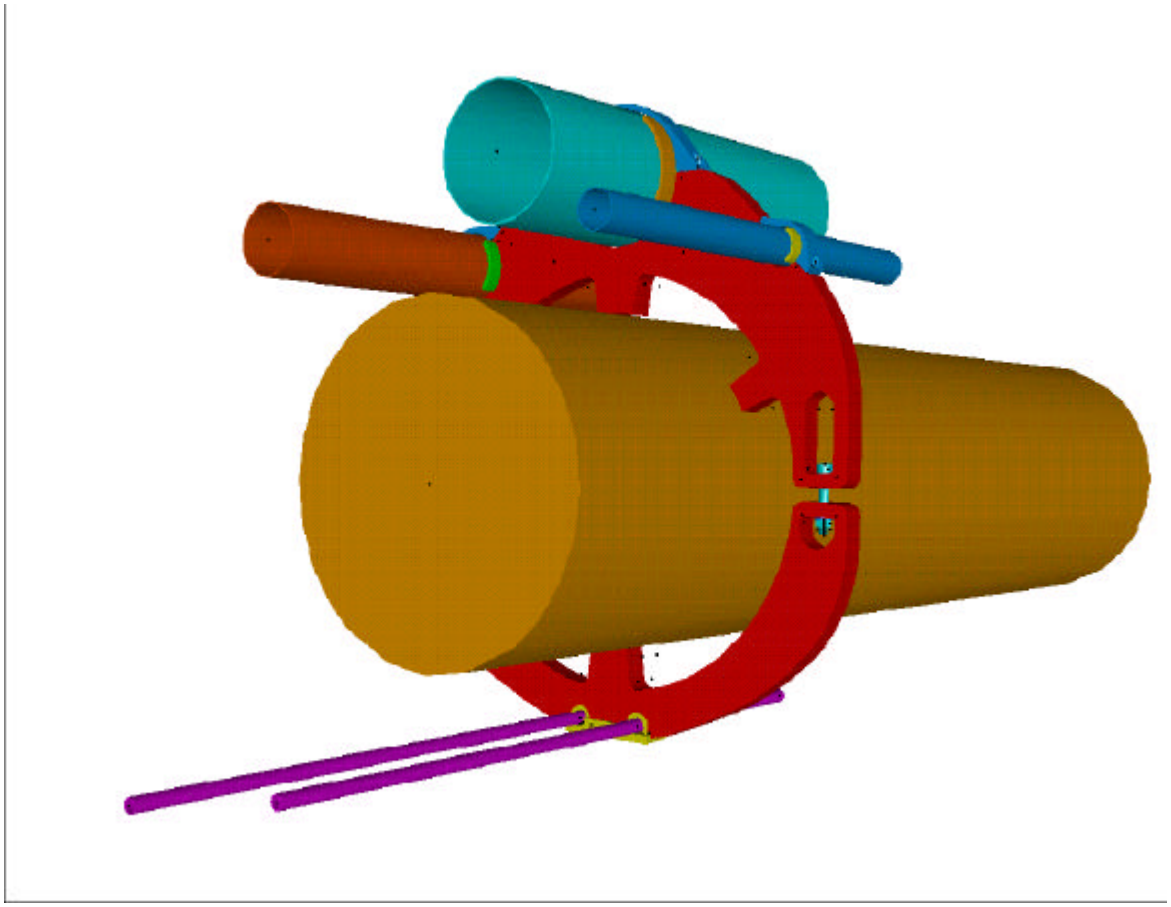

Q1 vacuum vessel

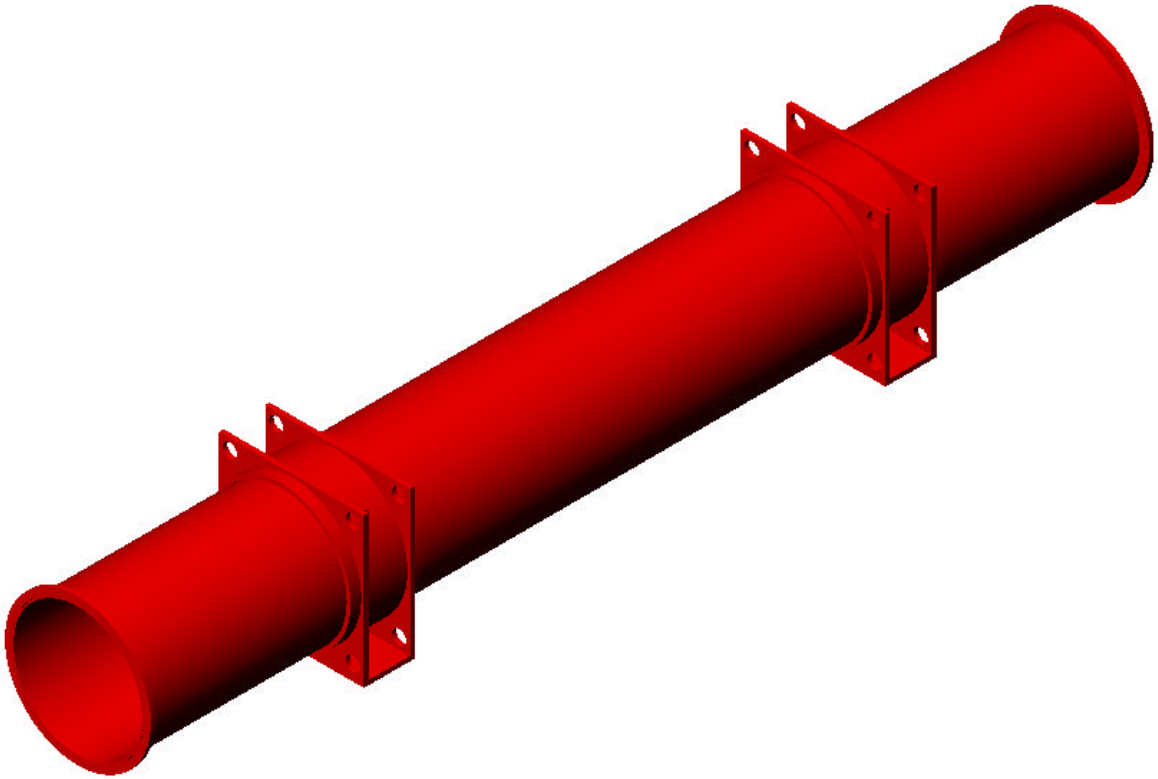

Q1 cryostat assembly (without end dome)

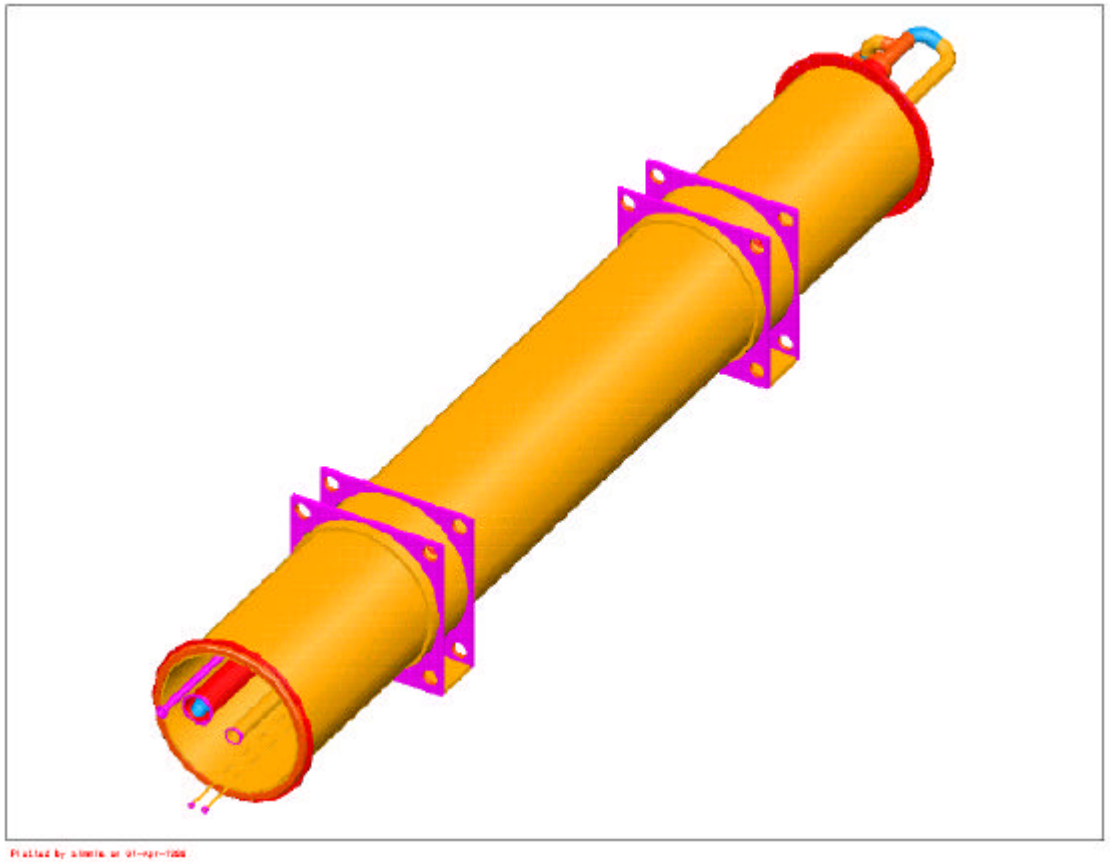

IRQ cryostat end view

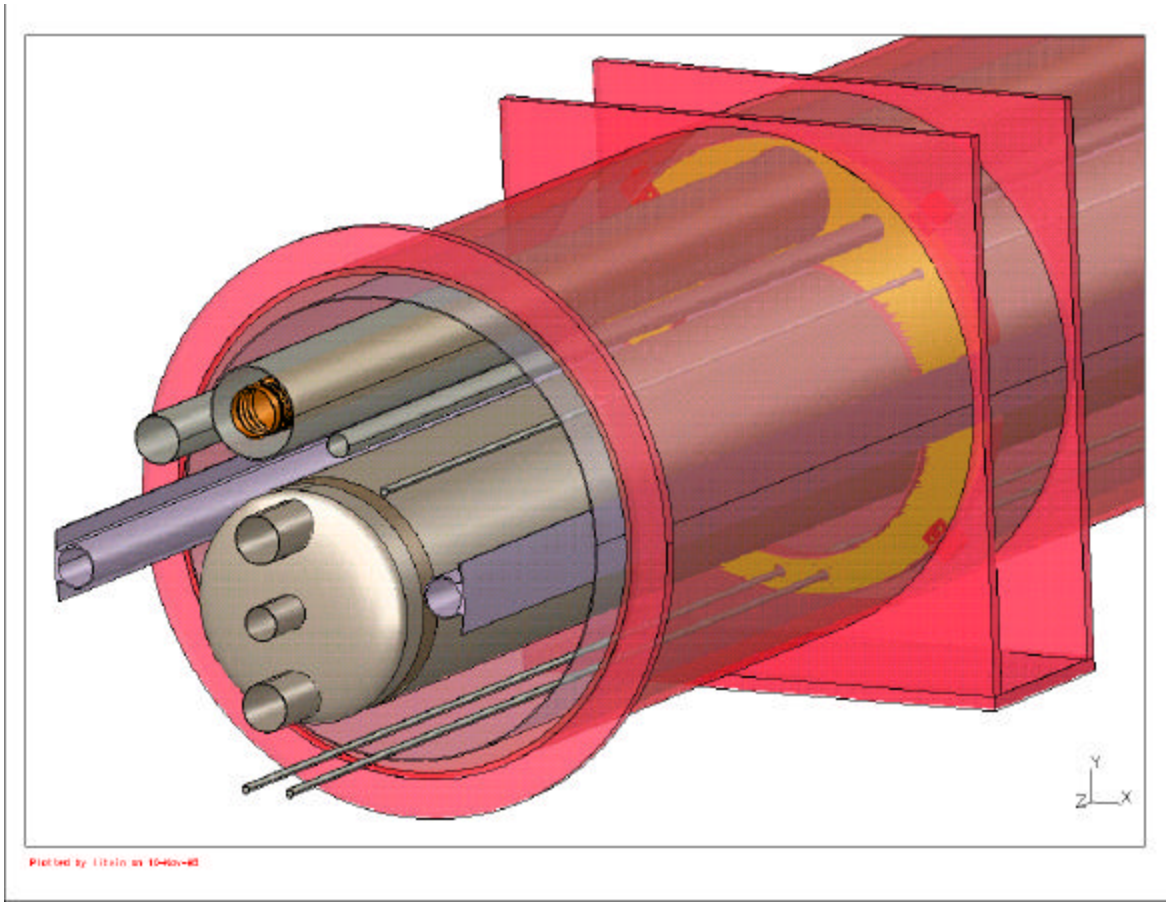

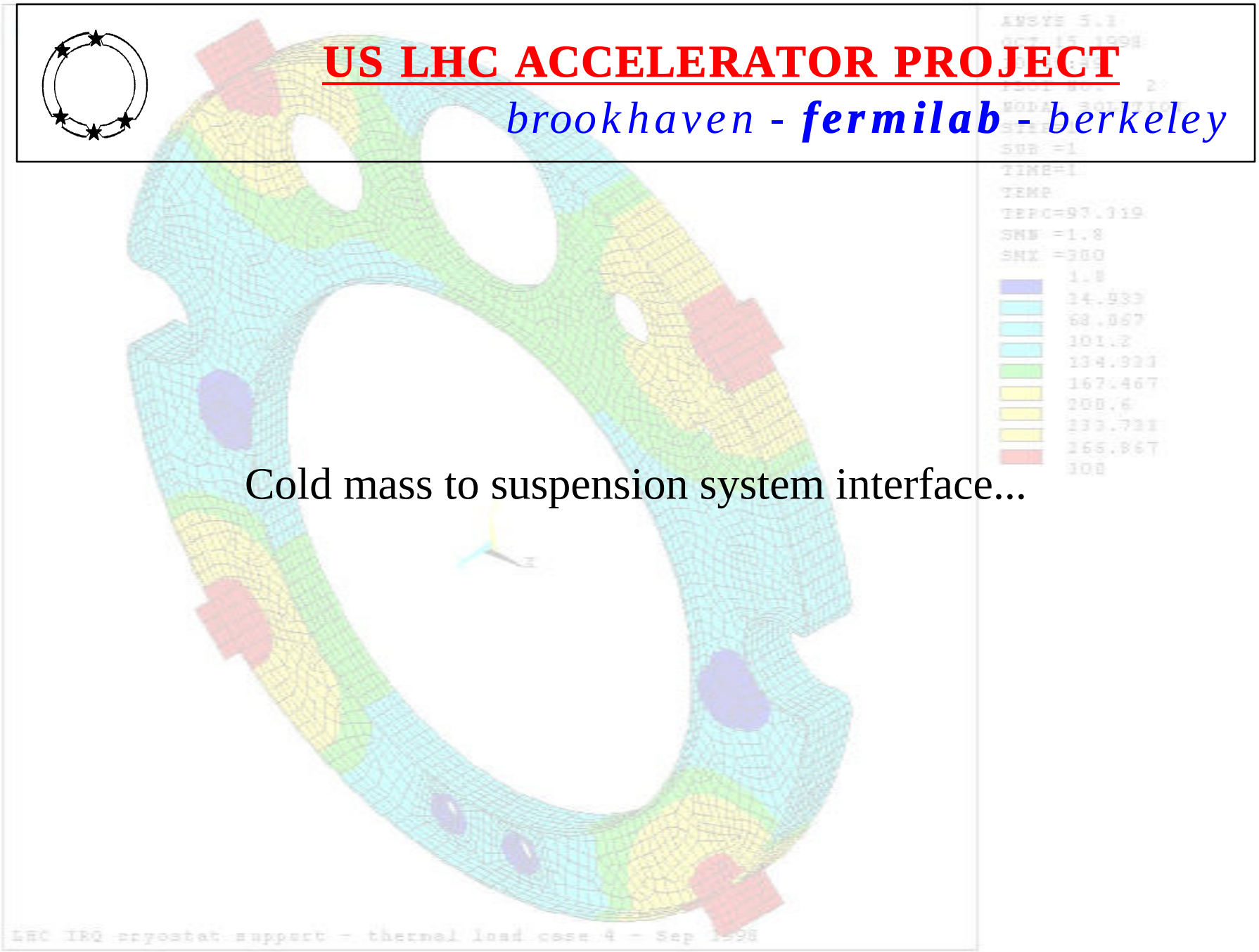

Cold mass to suspension system interface...

Support to cold mass connection

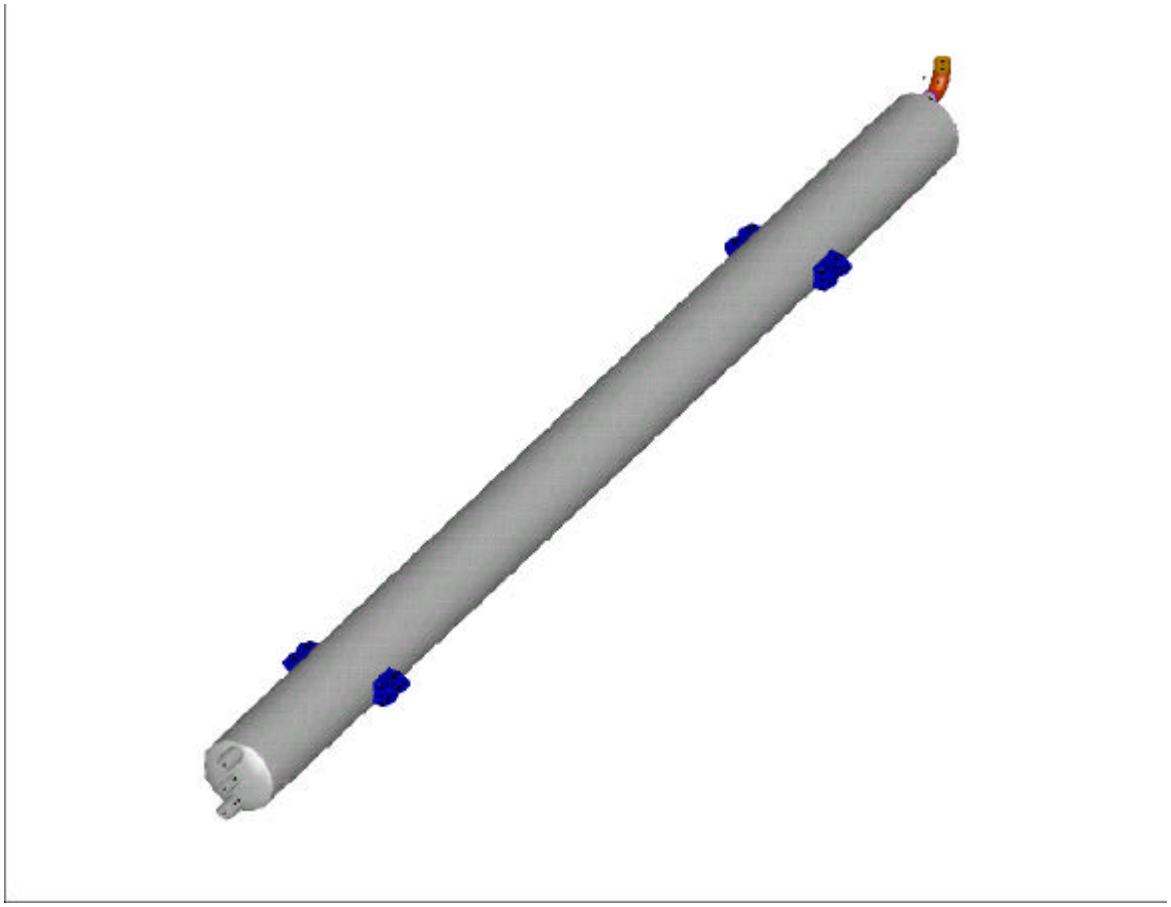

Support to cold mass connection

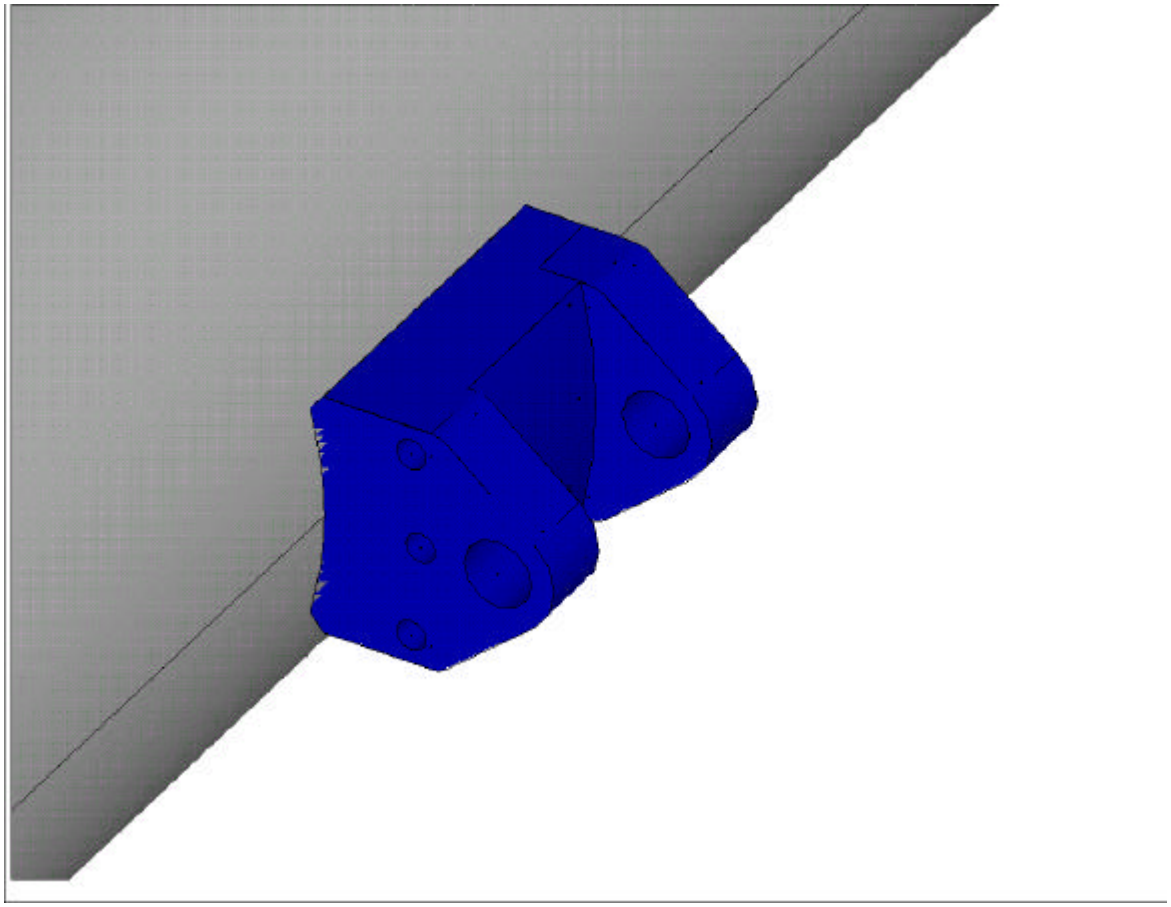

Support to cold mass connection

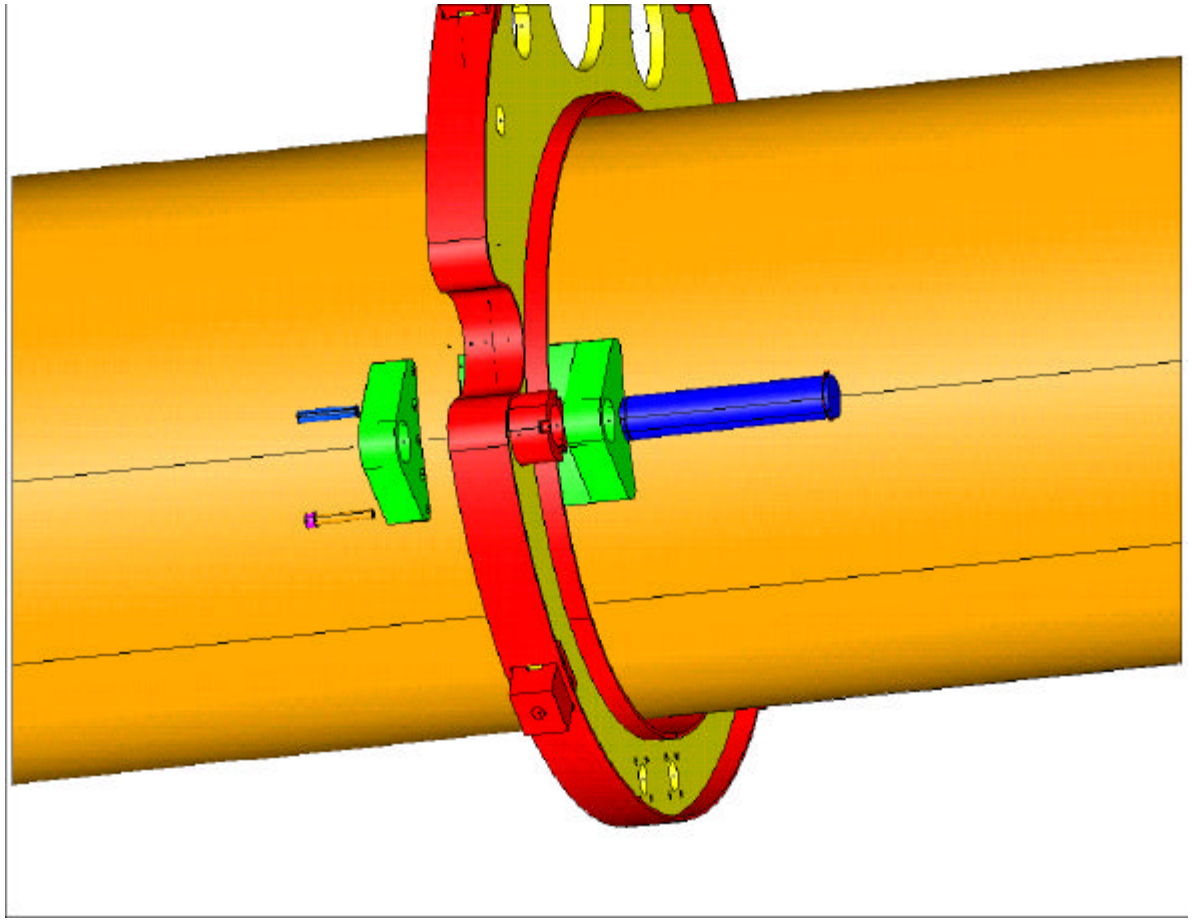

US LHC ACCELERATOR PROJECT

*brookhaven - **fermilab** - berkeley*

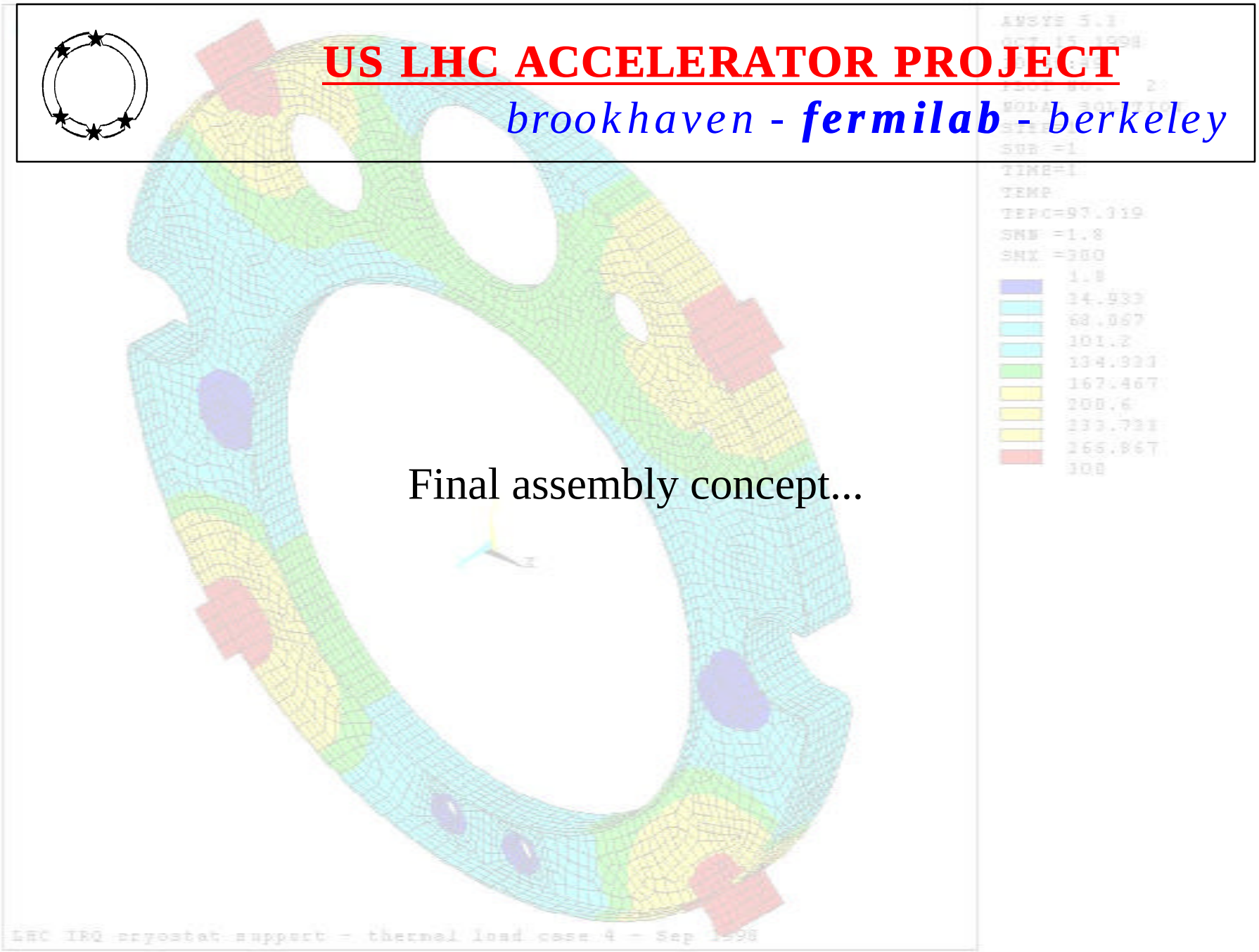

Final assembly concept...

Assembly tooling insertion beam

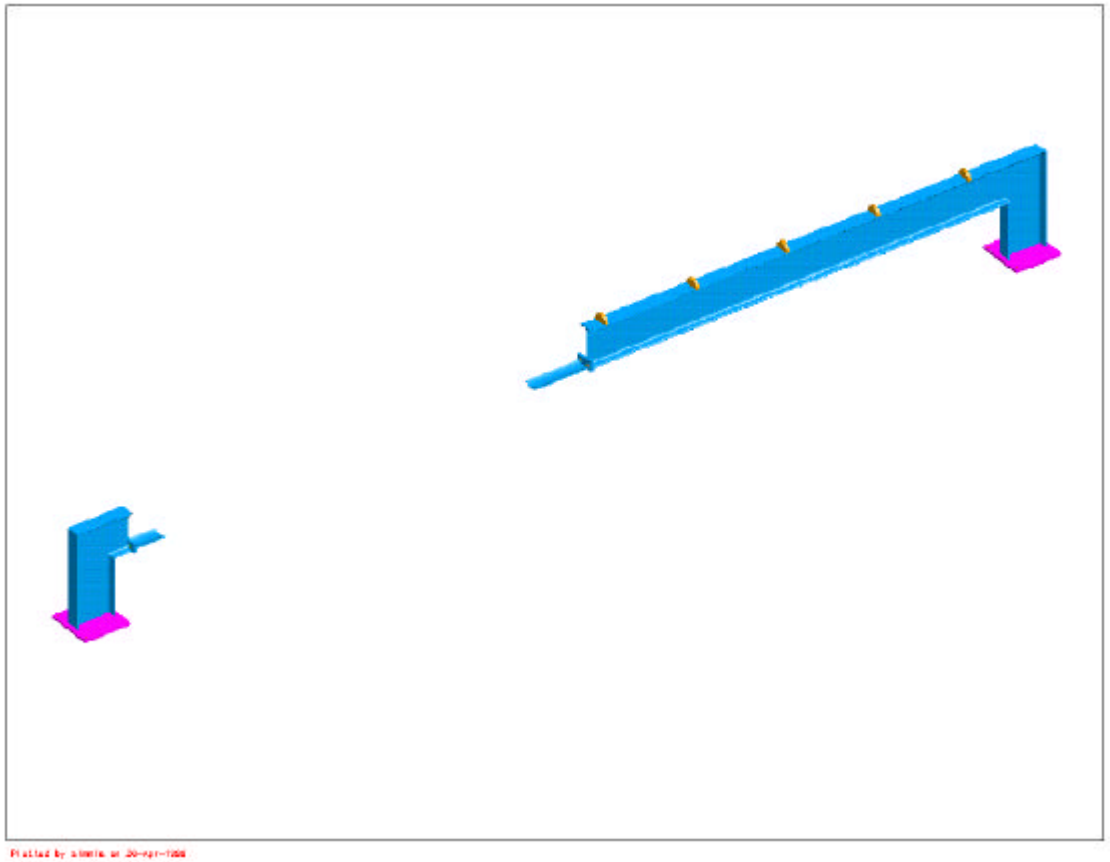

Assembly tooling insertion beam - initial setup

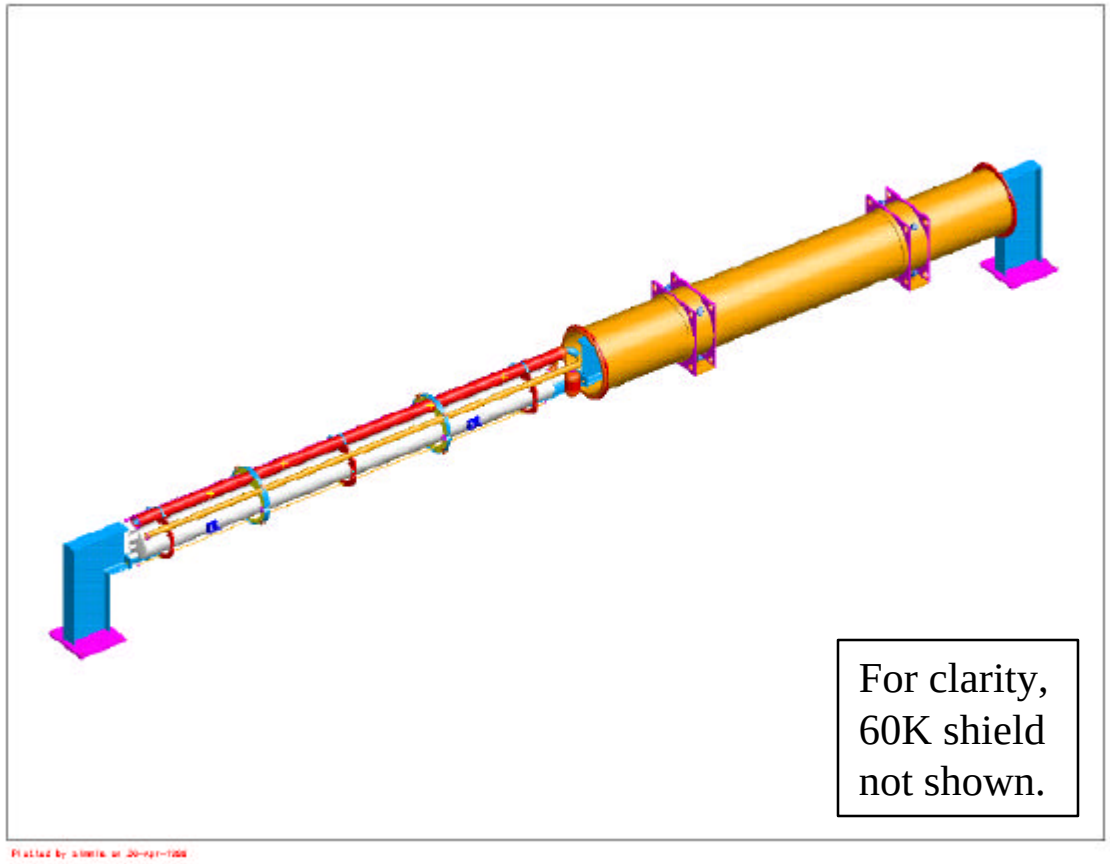

Assembly tooling insertion beam - insertion in progress

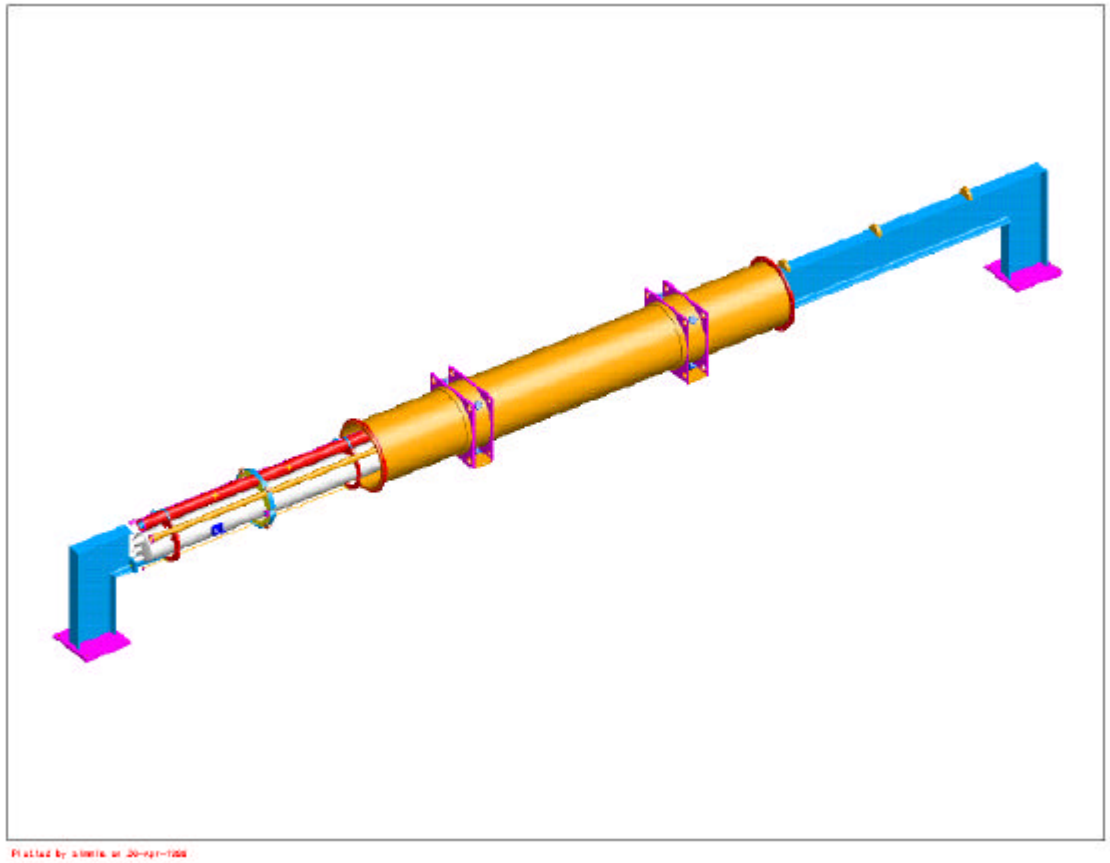

Assembly tooling insertion beam - insertion complete

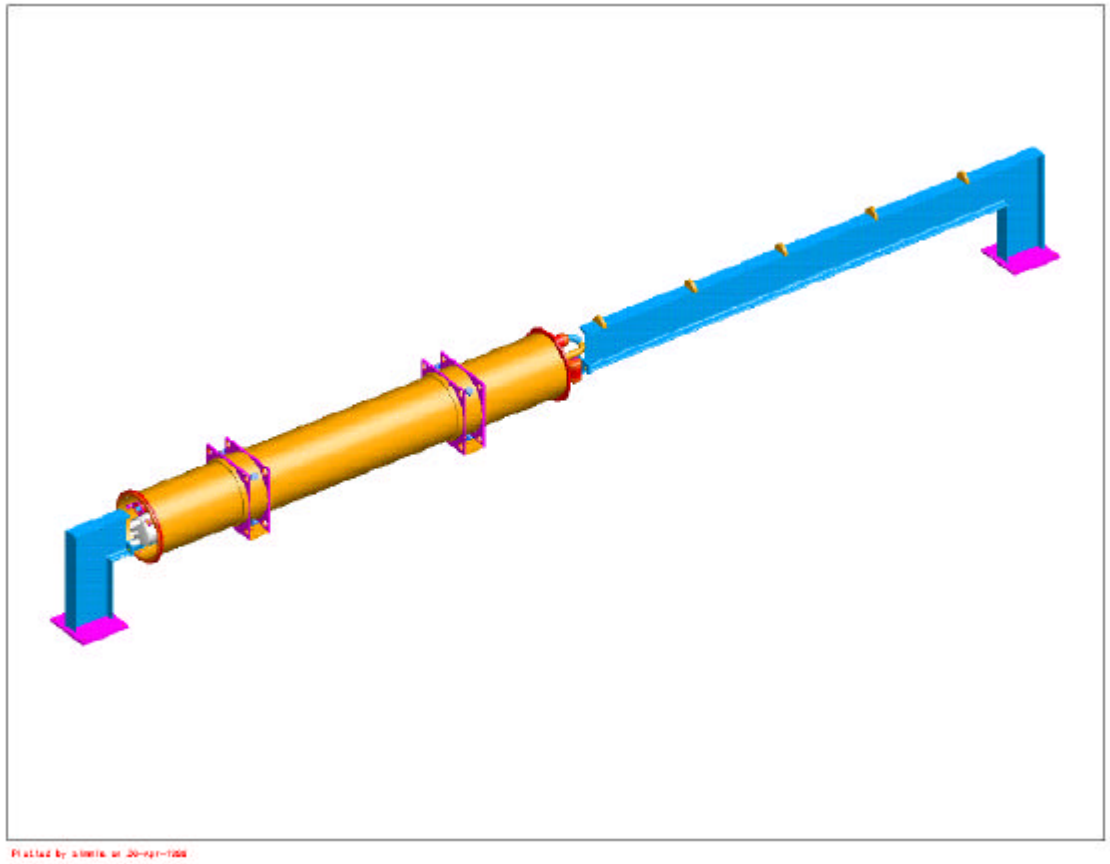

US LHC ACCELERATOR PROJECT

*brookhaven - **fermilab** - berkeley*

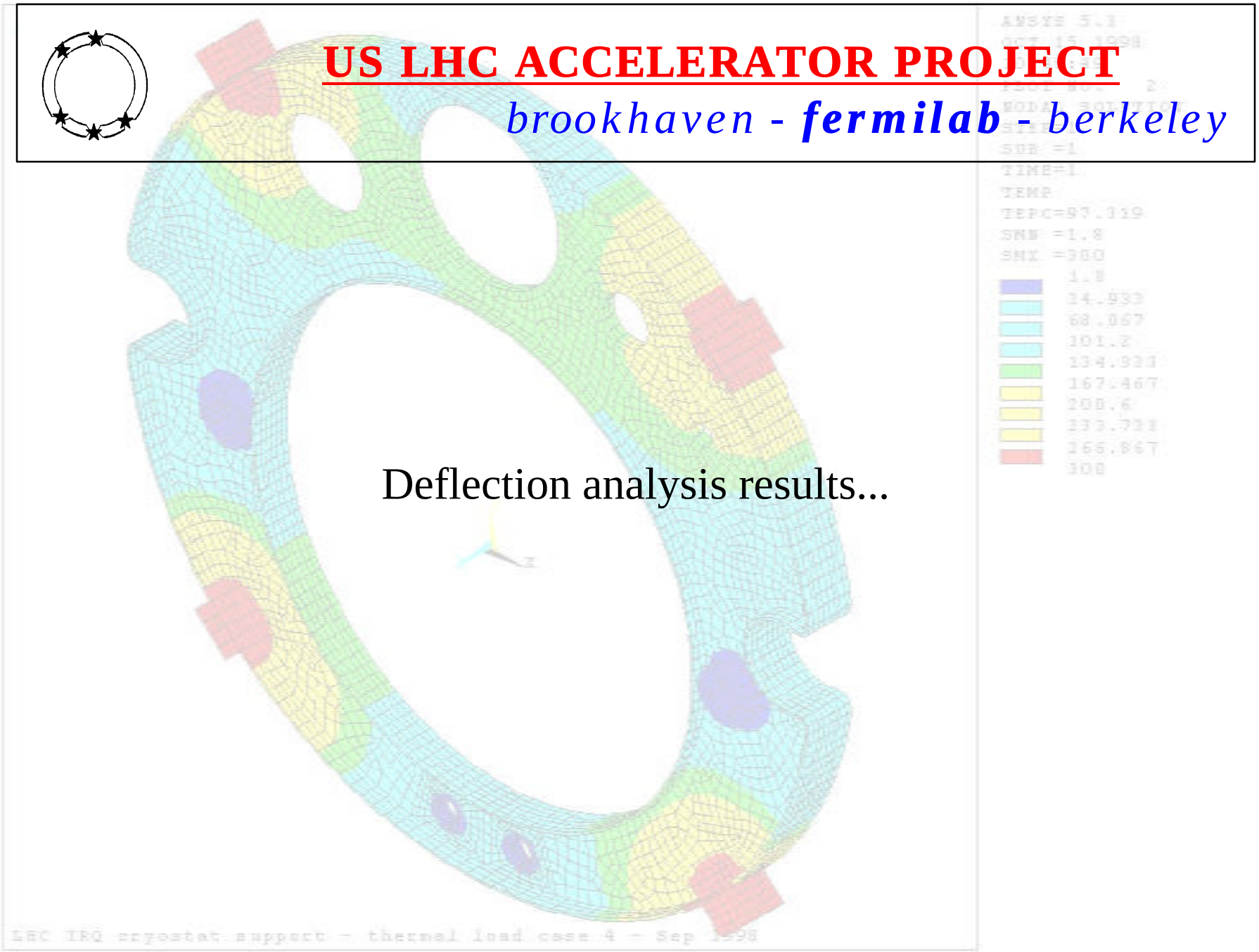

Deflection analysis results...

IRQ cryostat “spider” support

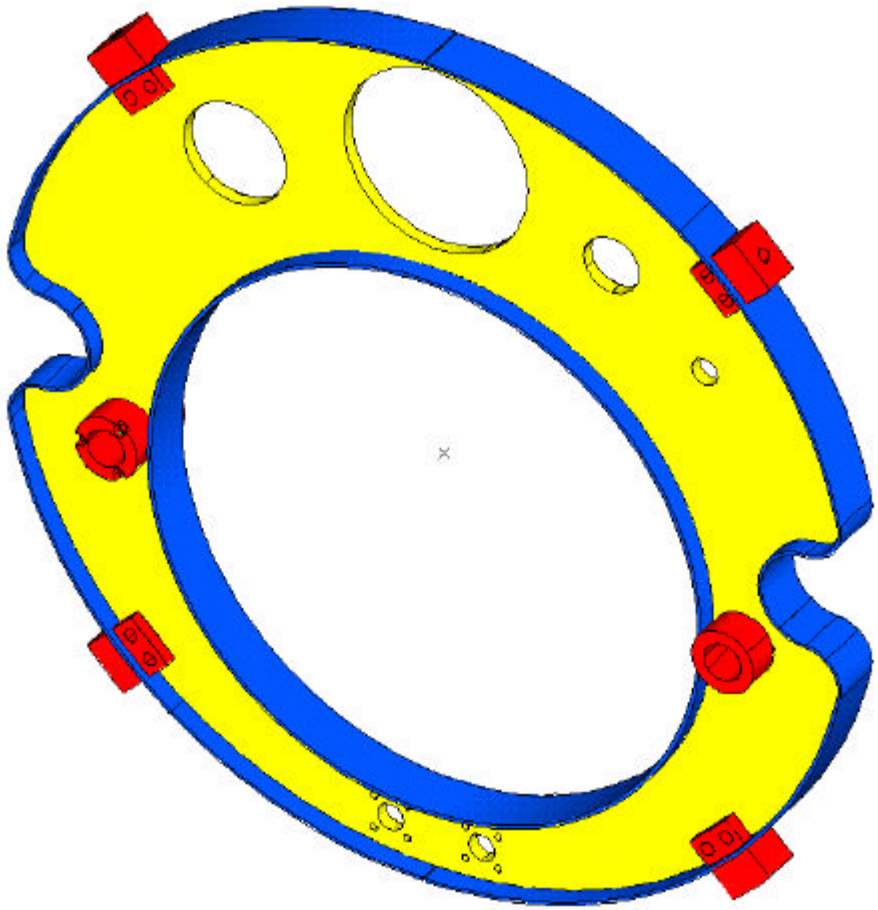

IRQ cryostat support analysis thermal boundary conditions

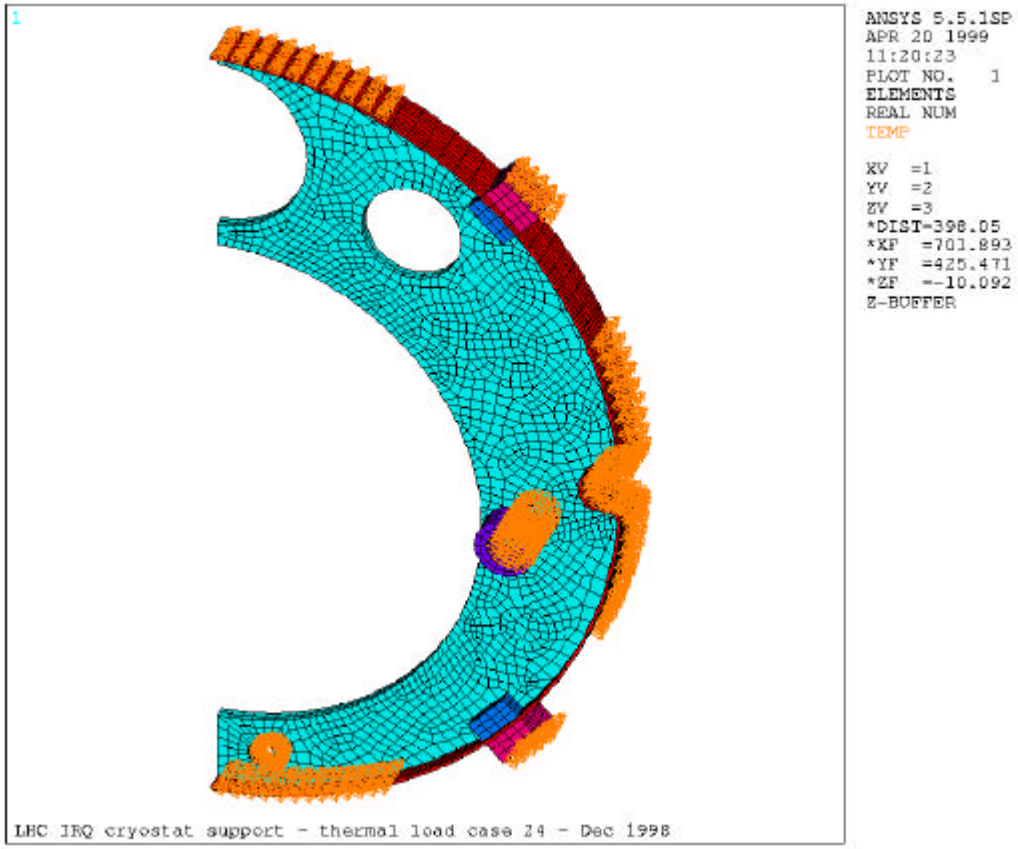

IRQ cryostat support analysis temperature distribution

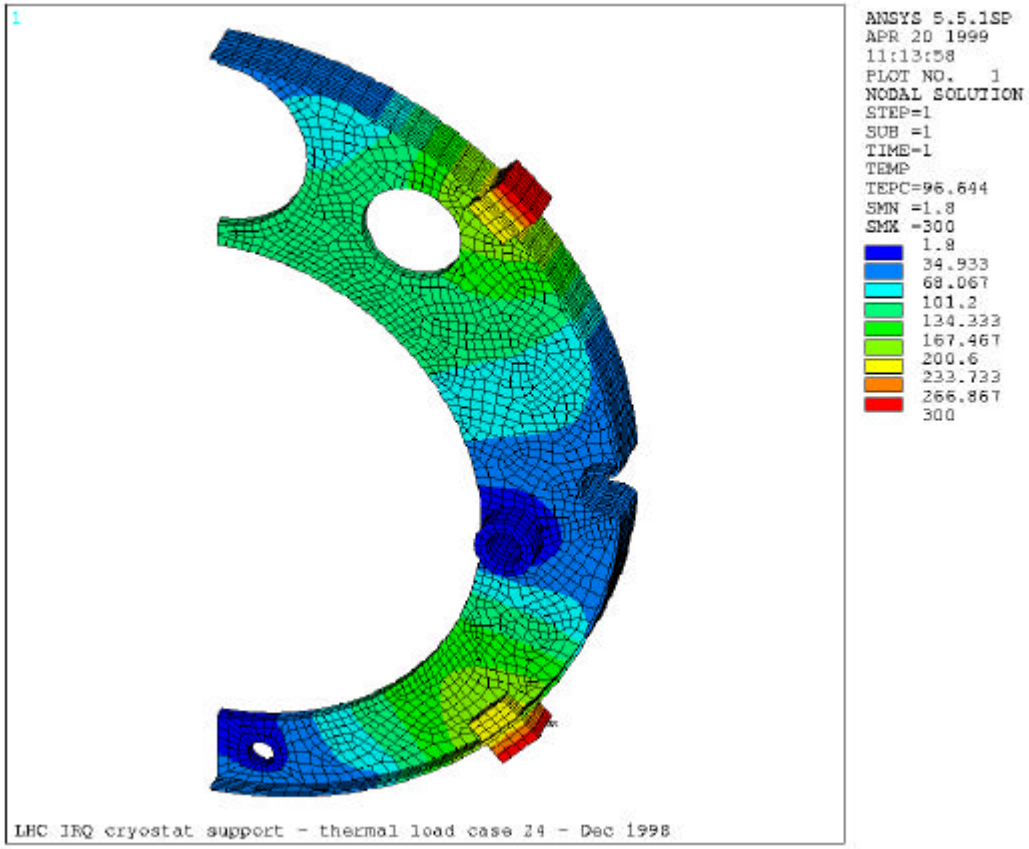

Vertical deflections - cooldown + 1g vertical load (inches)

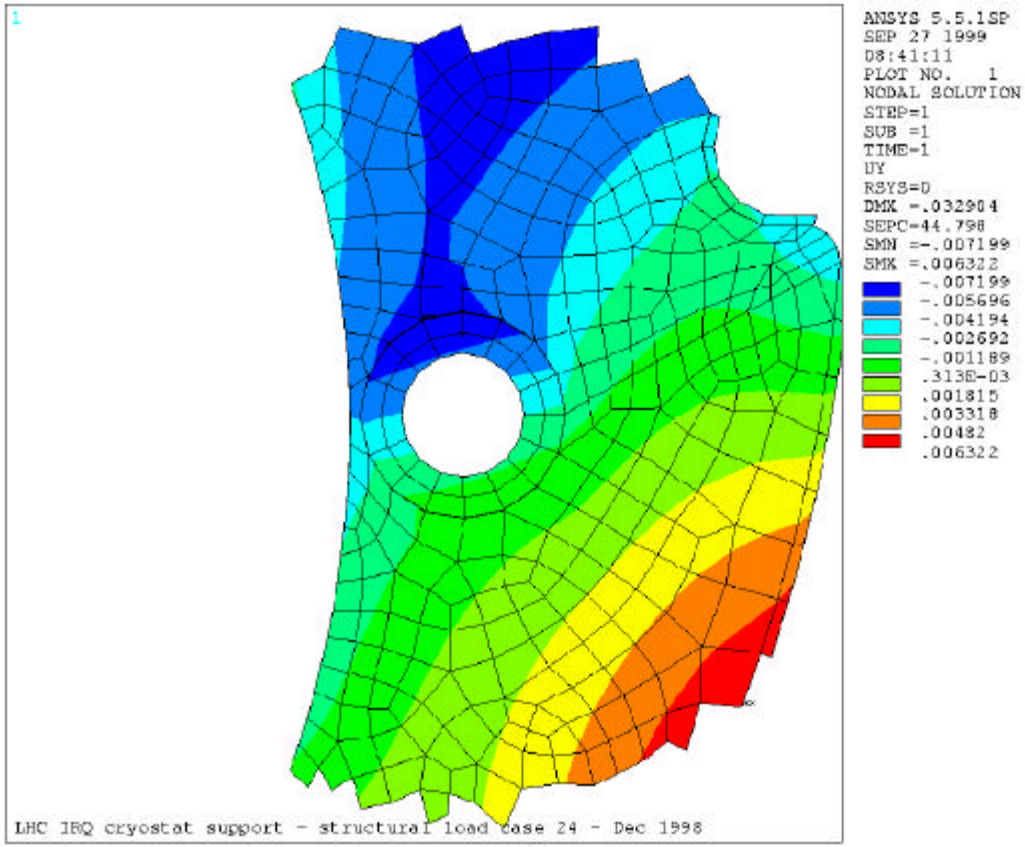

Vertical deflections - cooldown only (inches)

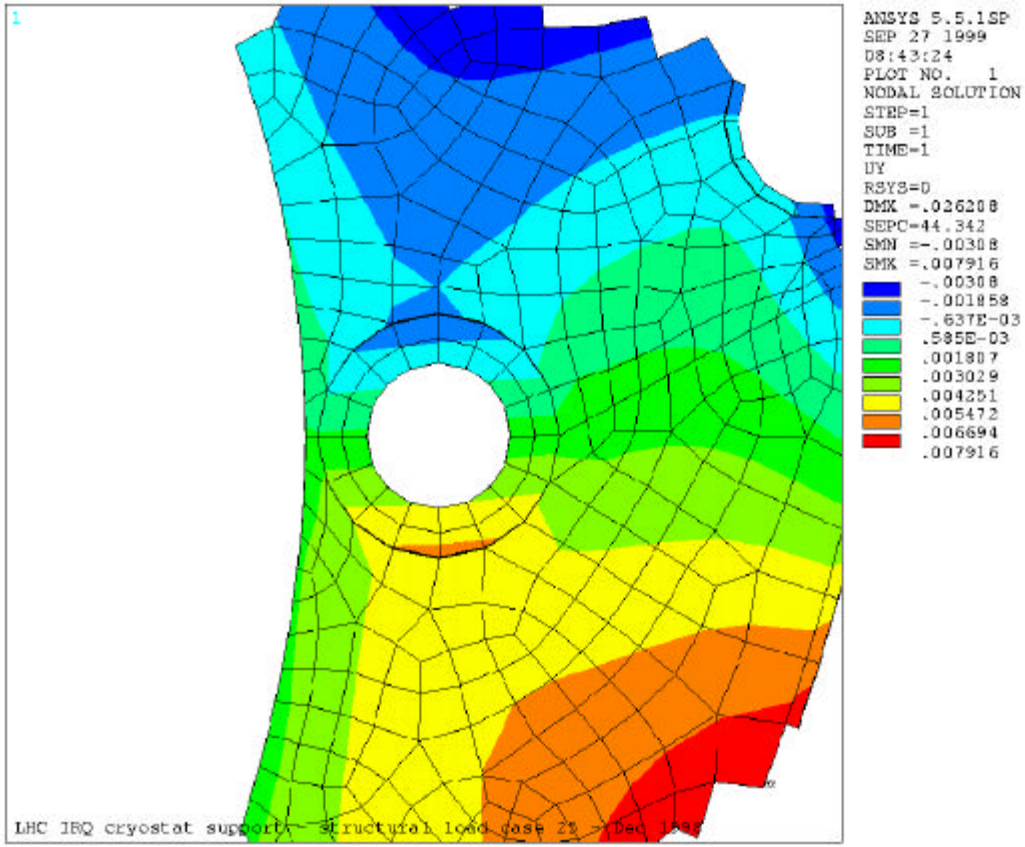

Vertical deflections - 2g vertical load only (inches)

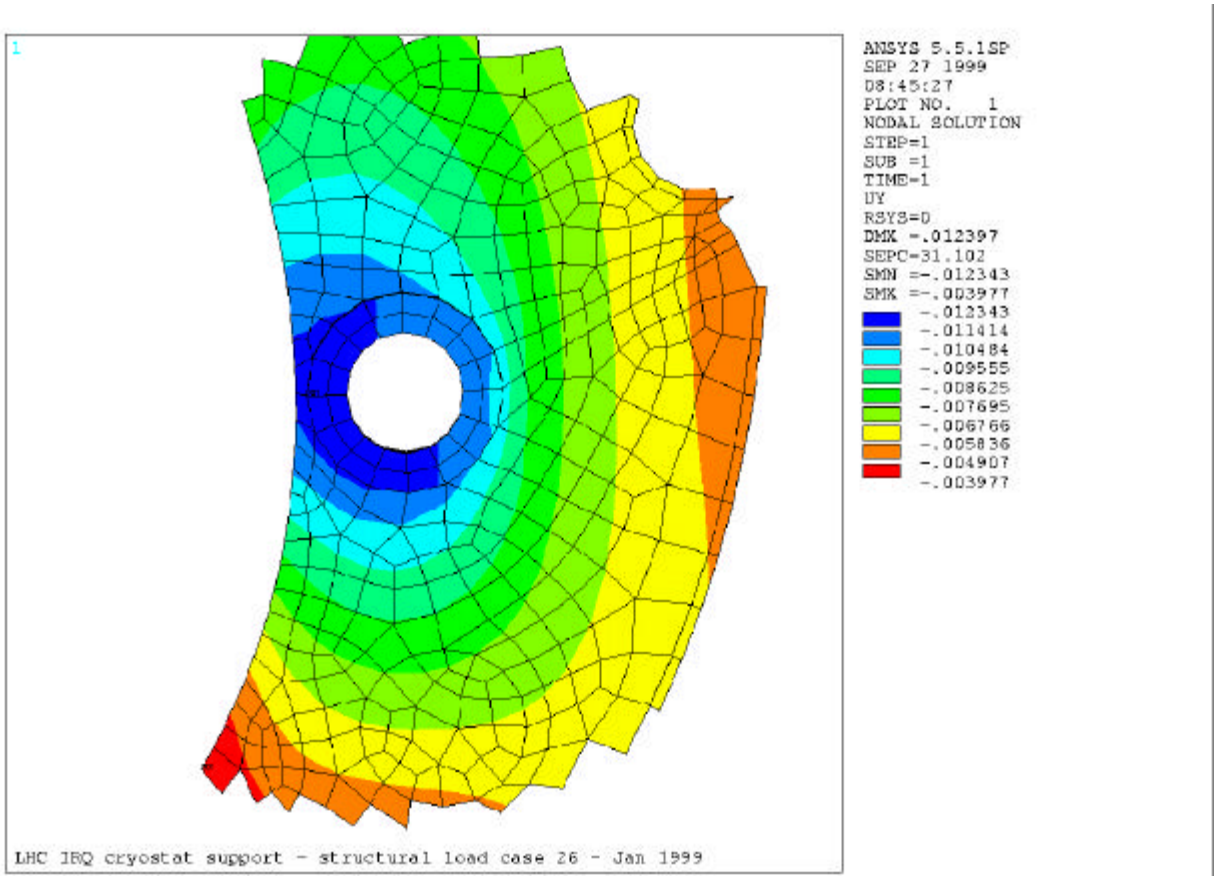

Summary of deflection estimates

- Deflection due to weight only: -0.006” (-0.00024 mm)
- Change during cooldown: +0.002” (+0.00008 mm)
- Net change: -0.004” (-0.00016 mm)

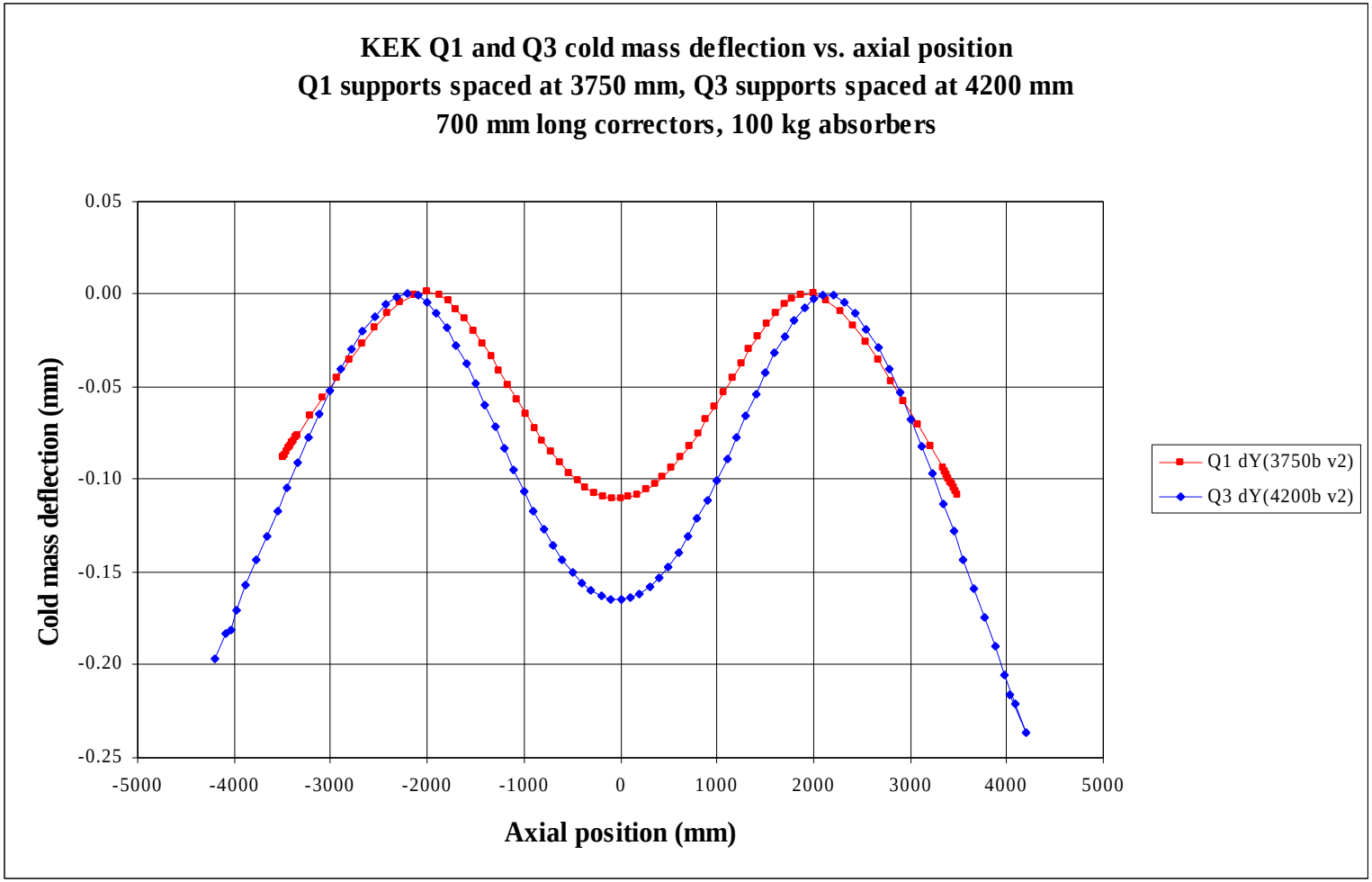
KEK Q1 and Q3 cold mass deflection vs. axial position
Q1 supports spaced at 3750 mm, Q3 supports spaced at 4200 mm
700 mm long correctors, 100 kg absorbers
Cold mass deflection (mm)
0.05
0.00
-0.05
-0.10
-0.15
-0.20
-0.25
-5000
-4000
-3000
-2000
-1000
0
1000
2000
3000
4000
5000
Axial position (mm)
Q1 dY(3750b v2)
Q3 dY(4200b v2)

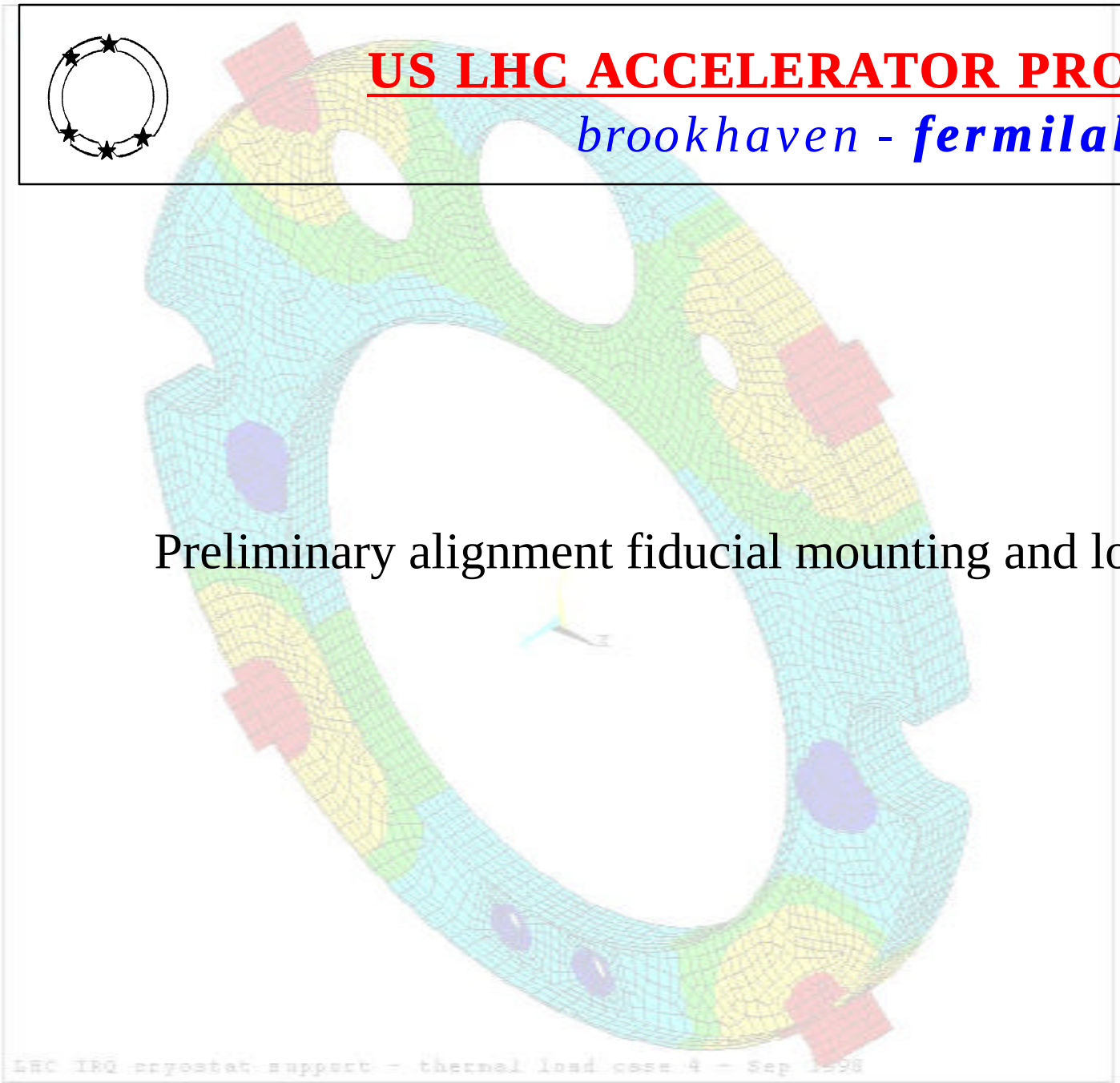

Preliminary alignment fiducial mounting and location...

CERN standard fiducial ball and holder

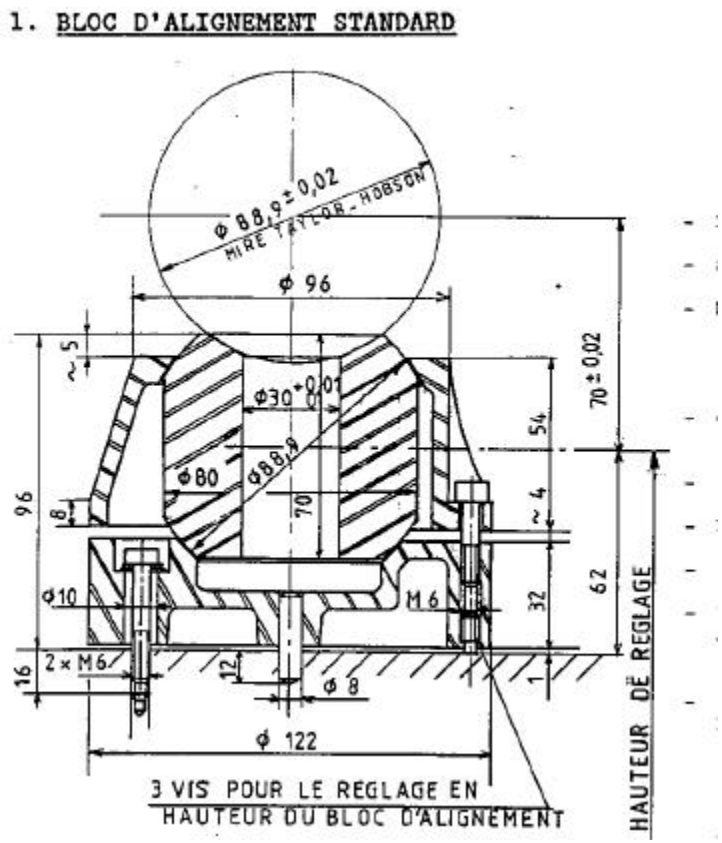

LHC dipole cross section with fiducial holder

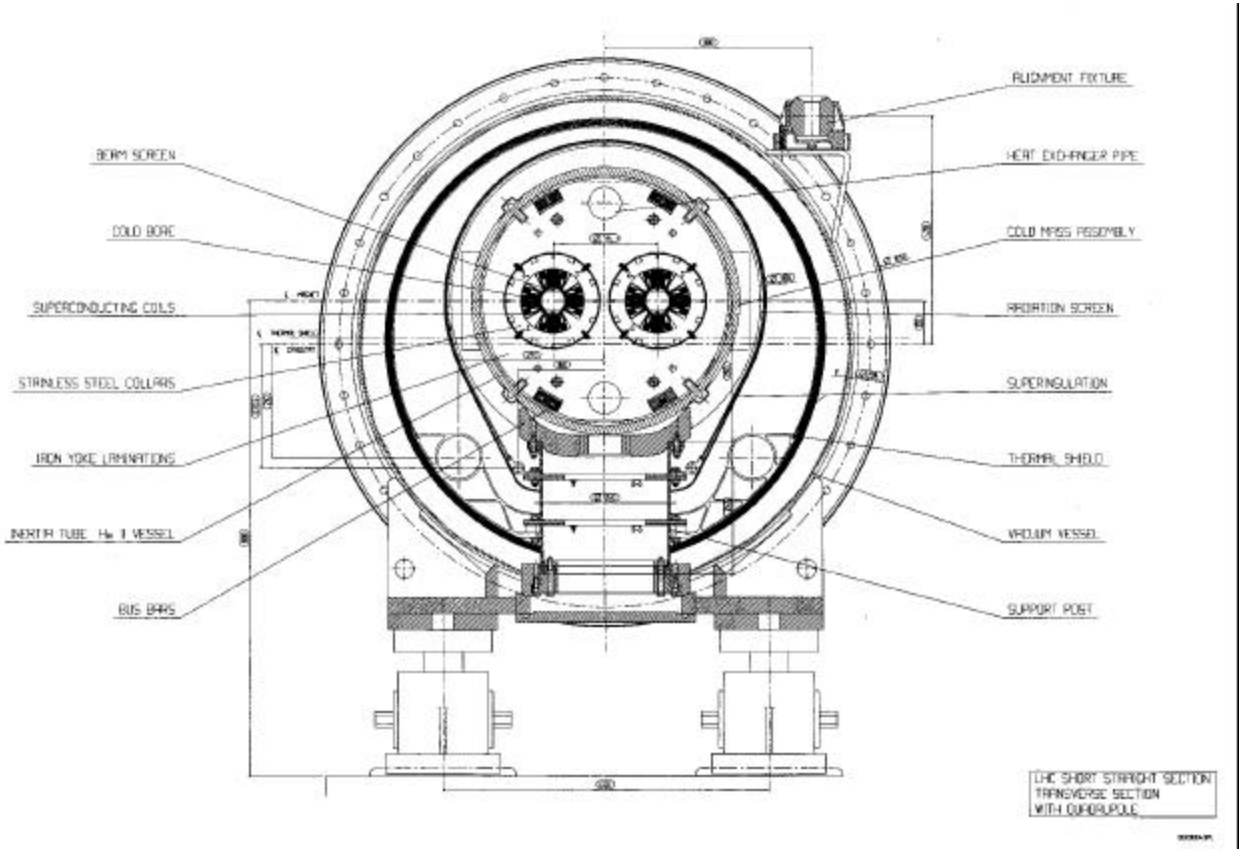

Q1 vacuum vessel

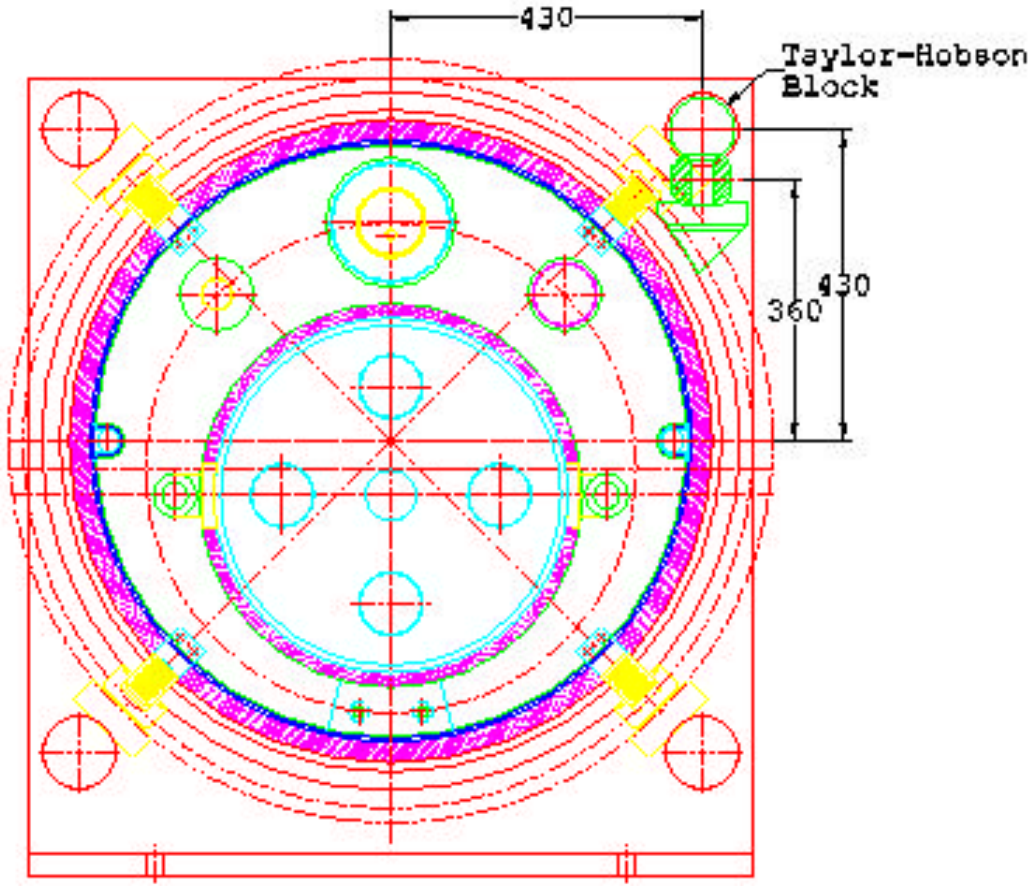

US LHC ACCELERATOR PROJECT

*brookhaven - **fermilab** - berkeley*

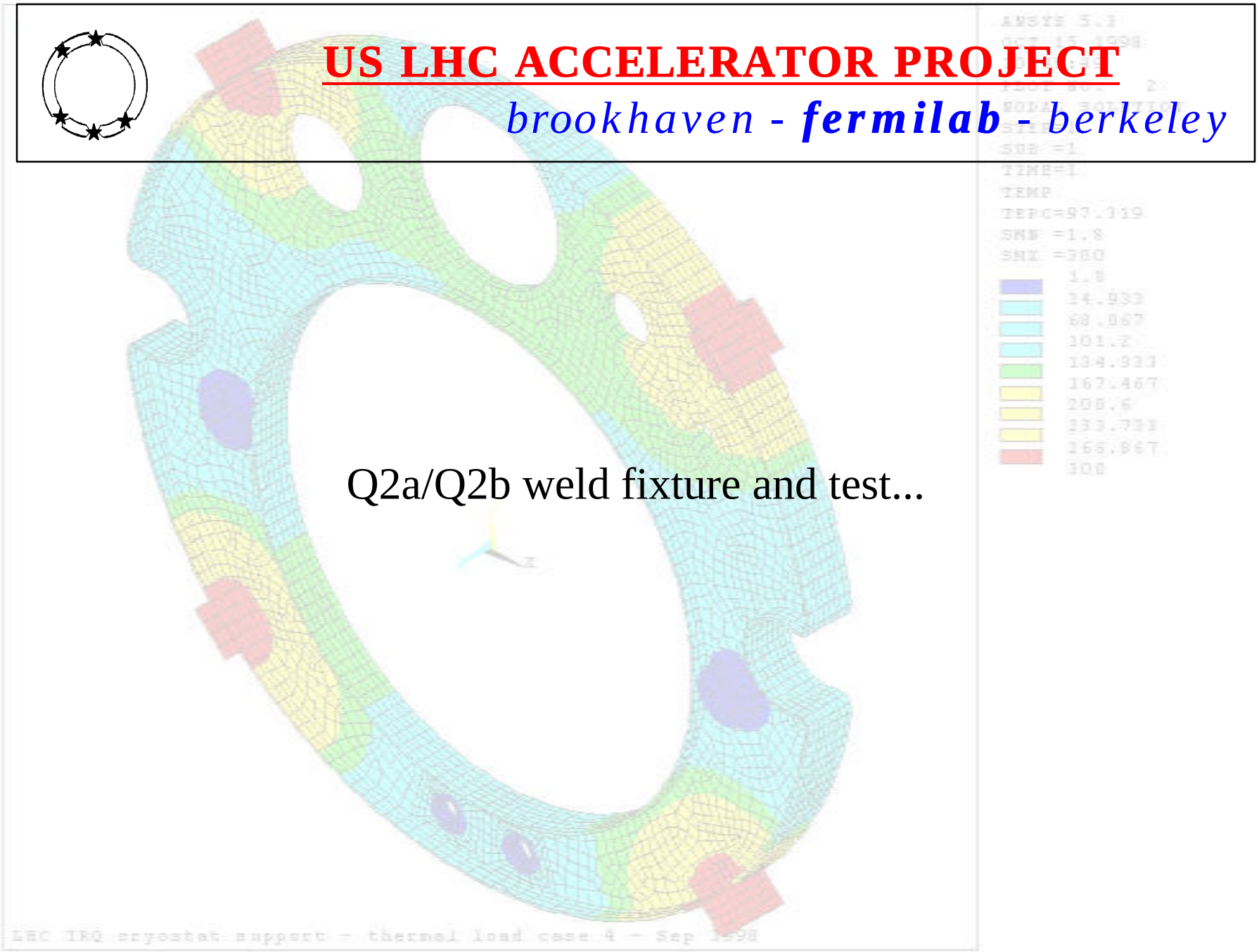

Q2a/Q2b weld fixture and test...

Q2a/Q2b weld fixture (longitudinal view)

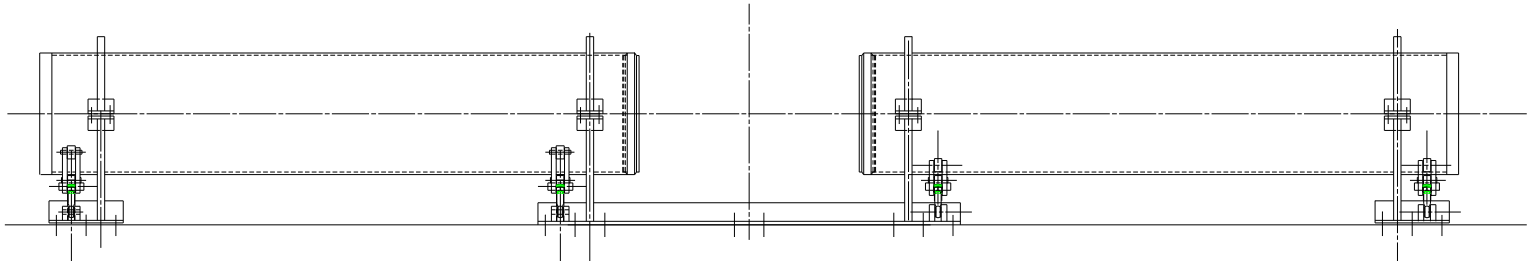

Q2a/Q2b weld fixture (cross section)

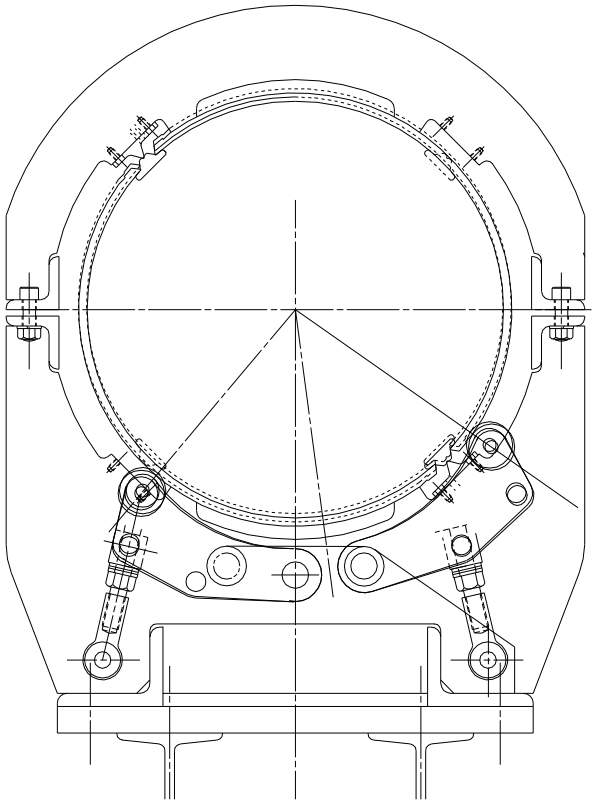

Short term plans (alignment related)

- Continue analysis and testing of the spider support.
- Initiate testing of the cold mass slides and slide materials.
- Finalize the design of the suspension system, including the cold mass to suspension interface.
- Test a mock-up of the weld between Q2a and Q2b.
- ...