US LHC ACCELERATOR PROJECT

*brookhaven - **fermilab** - berkeley*

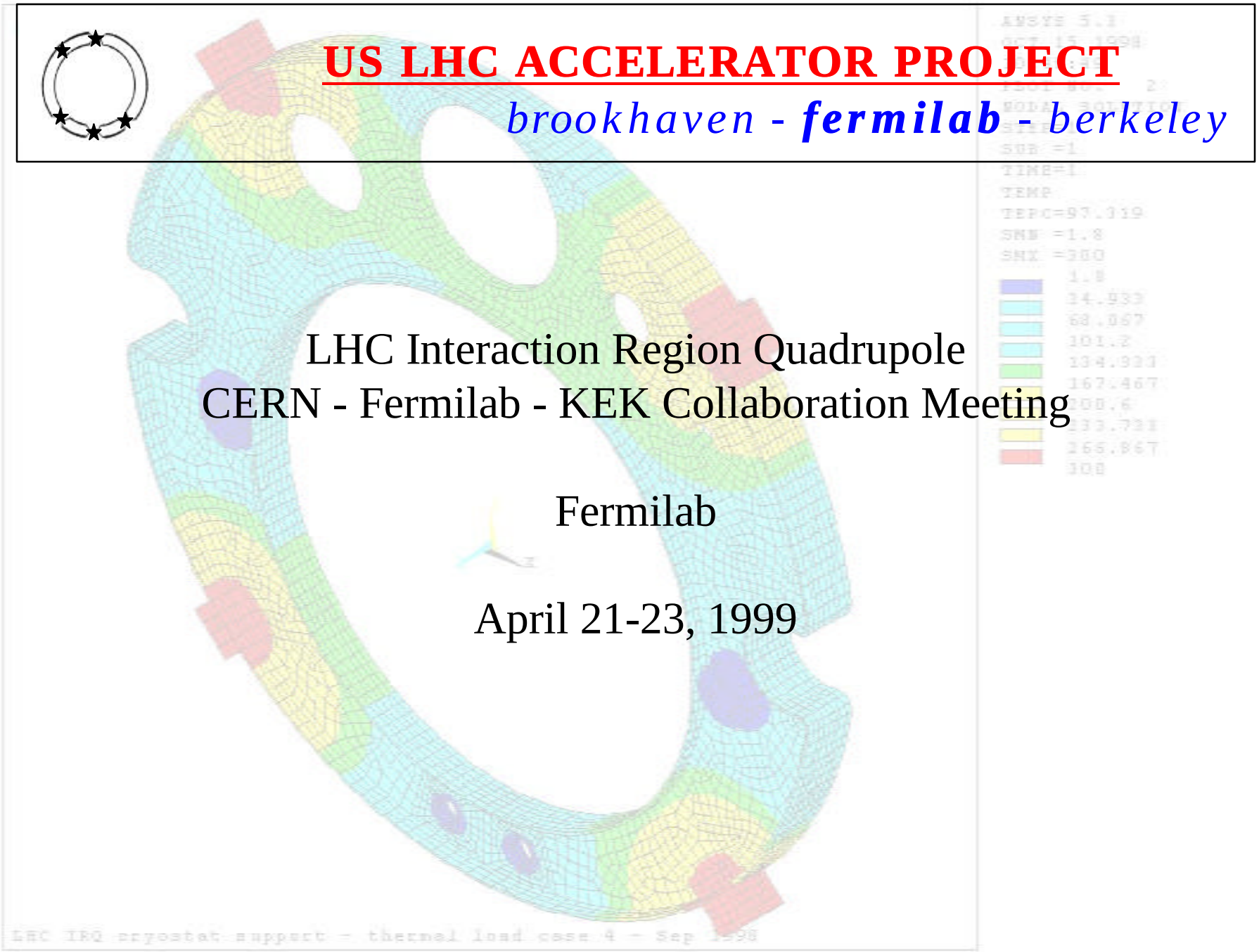

LHC Interaction Region Quadrupole
CERN - Fermilab - KEK Collaboration Meeting

Fermilab

April 21-23, 1999

IRQ cryostat topics

- For the current status on cryostat related activities, design information, reports, etc. visit: http://tdpc02.fnal.gov/nicol/lhc_irq_cryostat/index.html
- Brief review of the status at the cryostat CDR (Dec 1998).
- Suspension system heat load update.
- Cold mass to suspension system interface.
- Cold mass to piping system interface.
- Final assembly concept.
- Cold mass configurations.
- Preliminary Q1 cryostat design concept.
- Concerns.
- (Several topics relating to the ongoing heat exchanger test facility will be addressed in separate sessions.)

US LHC ACCELERATOR PROJECT

*brookhaven - **fermilab** - berkeley*

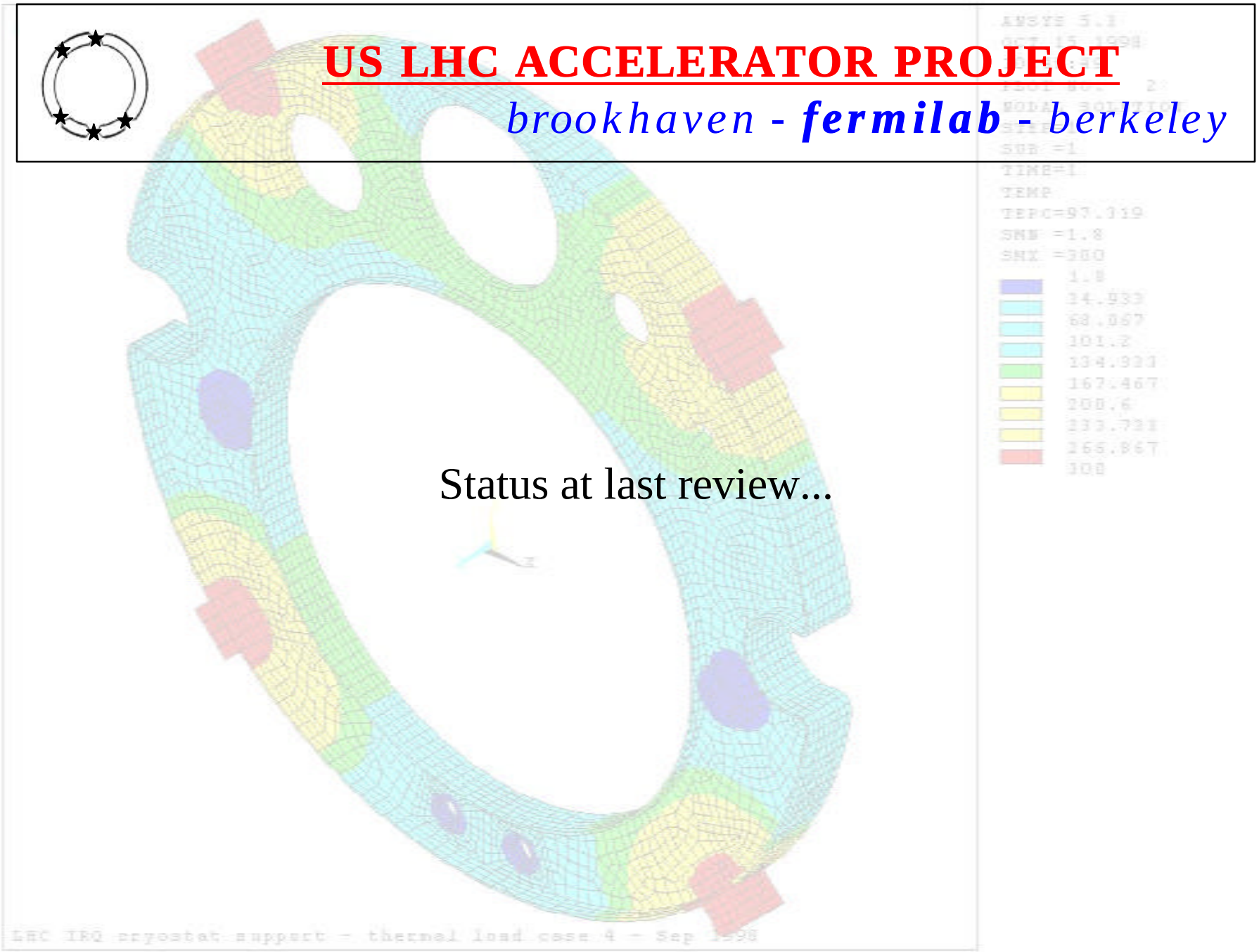

Status at last review...

Triplet layout from optics

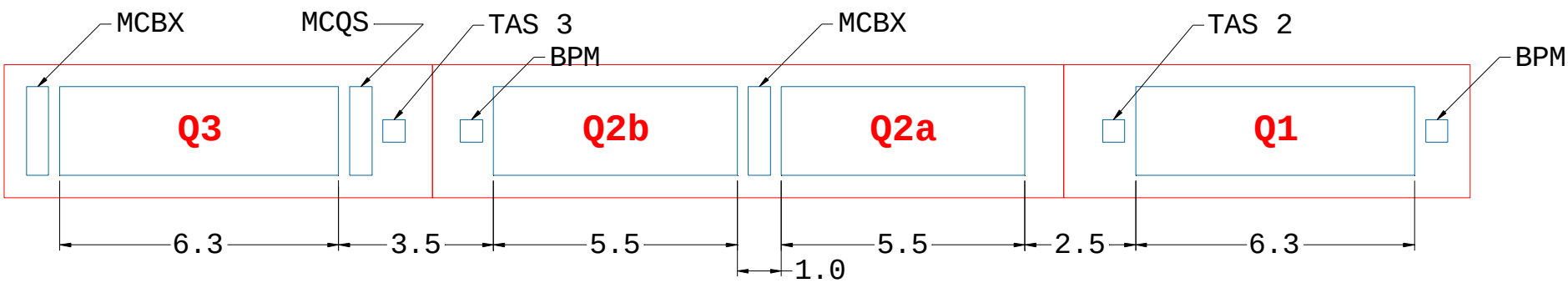

Notes:
1. Optics are V6.1.
2. All dimensions are in meters.
3. Magnets are shown in magnetic length.
4. From Fred - 6.3 m magnetic length becomes 6.604 m end plate to end plate.
   5.5 m magnetic length becomes 5.804 m end plate to end plate.

IRQ cryostat end view

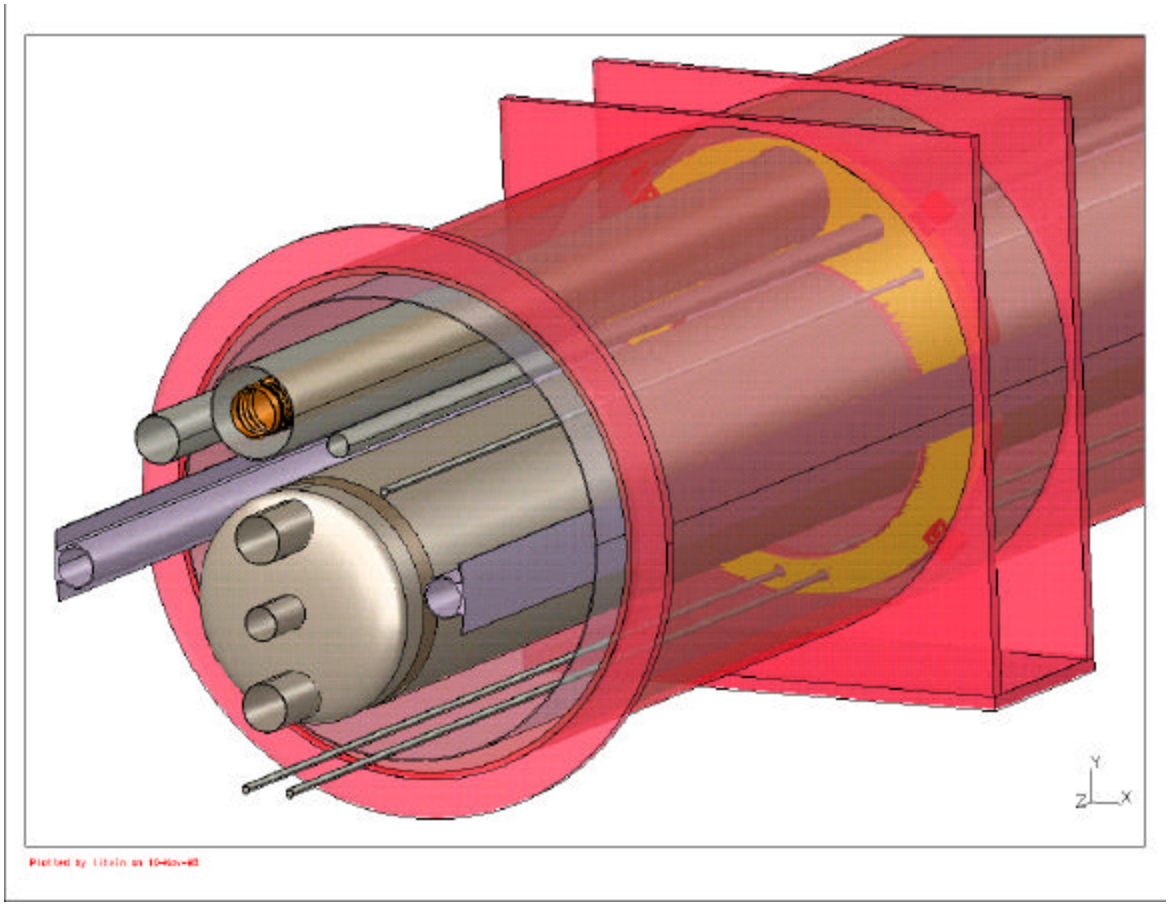

US LHC ACCELERATOR PROJECT

*brookhaven - **fermilab** - berkeley*

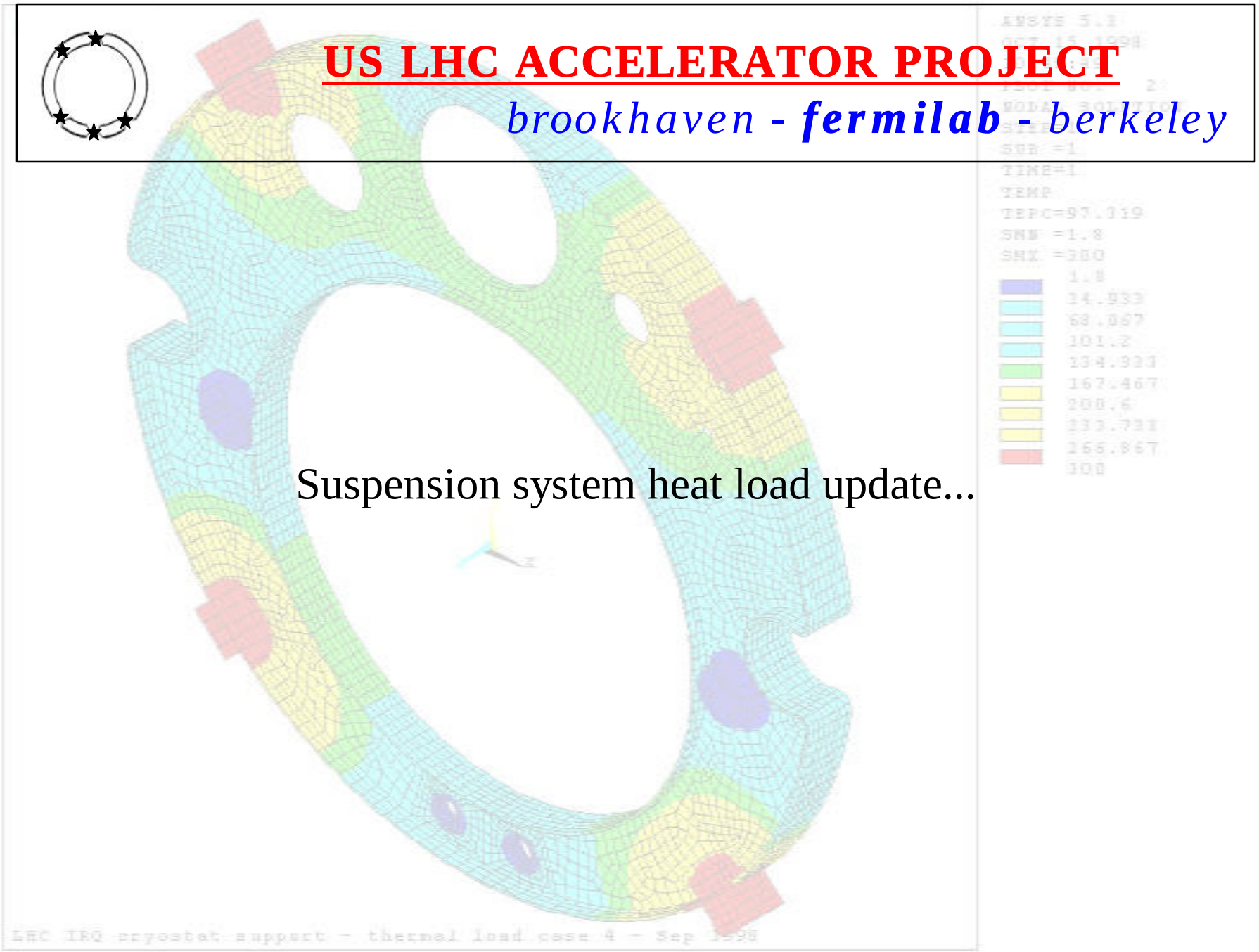

Suspension system heat load update...

IRQ cryostat “spider” support

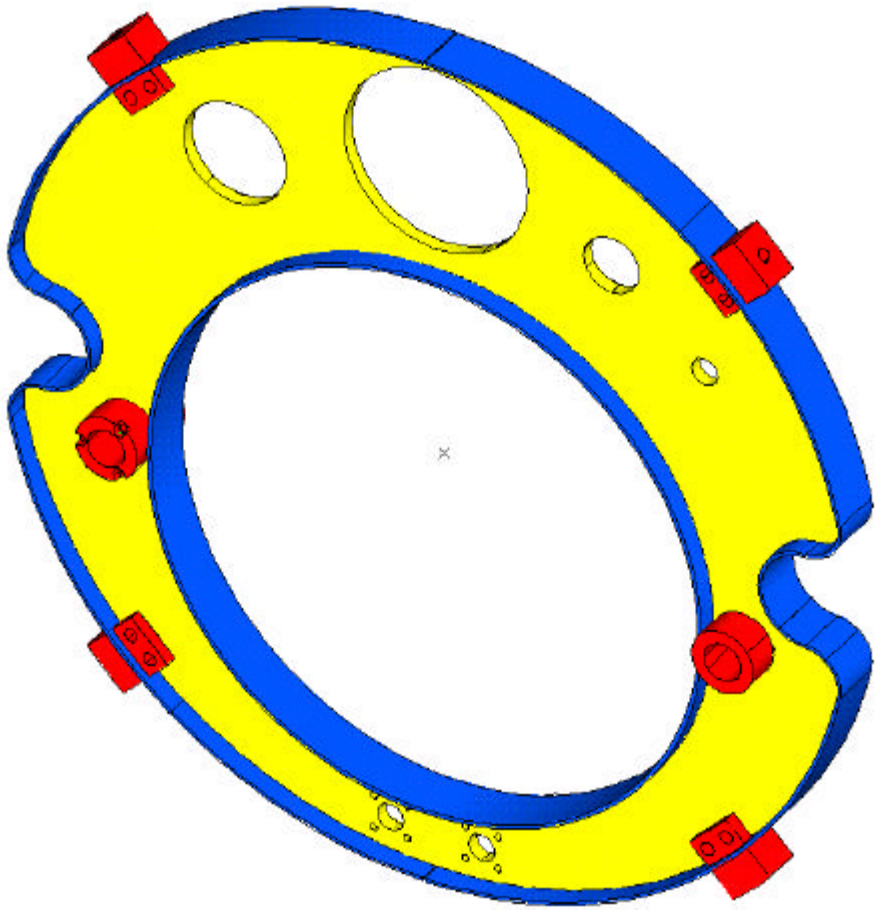

IRQ cryostat support analysis thermal boundary conditions

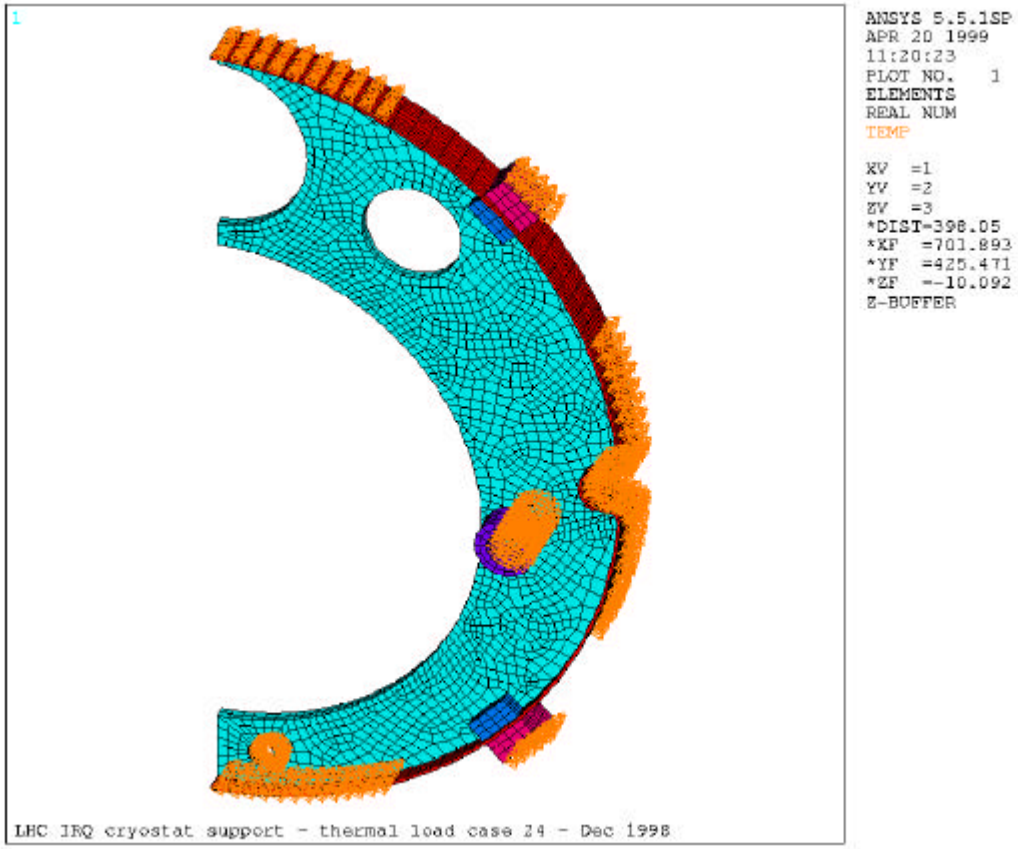

IRQ cryostat support analysis temperature distribution

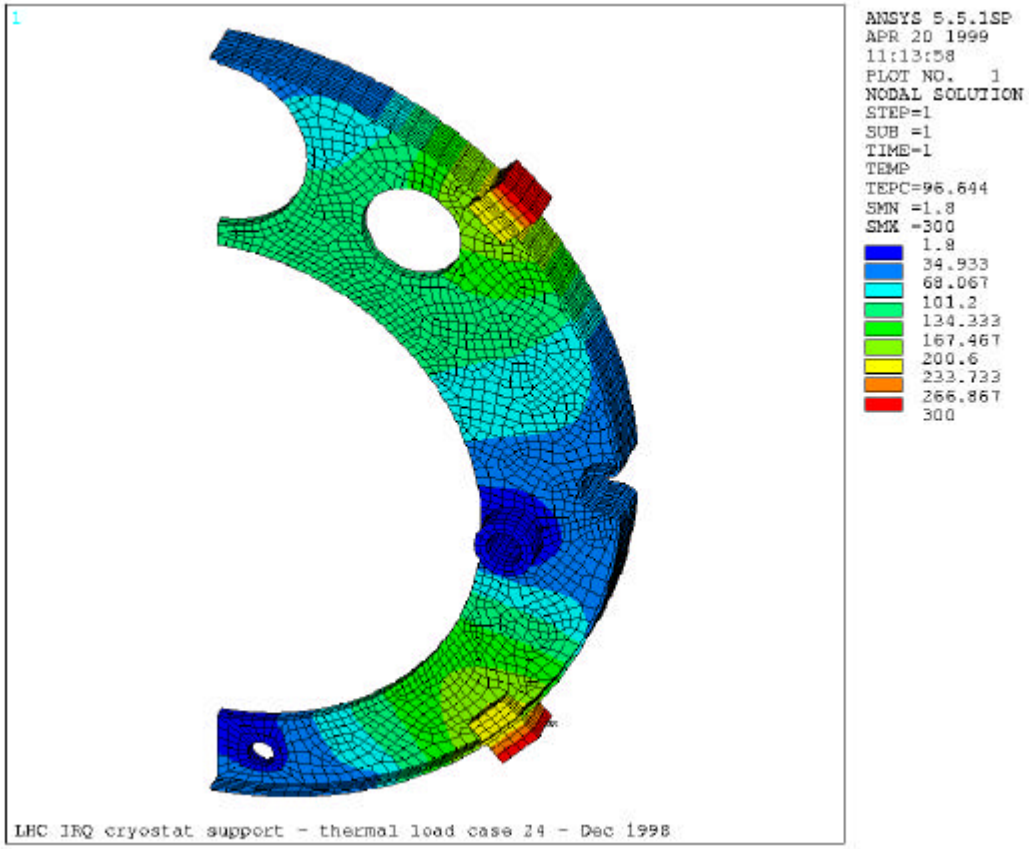

Thermal design criteria and current heat load estimates

LHC Interaction Region Quadrupole Cryostat Static and Dynamic Heat Load Summary				
T. Nicol - January 1999				
Inner triplet heat loads from ICEC paper (summer 1998)				
Temperature level	**50 to 75 K**	**4.6K**	**1.9K**	**Current lead flow**
Static heat loads (W)	**250**	**22**	**10**	
Dynamic heat loads (W)	**0**	**21**	**162**	
Total heat loads (W)	**250**	**43**	**172**	**3.7 (g/s)**

Inner triplet heat loads - calculated				
Temperature level	**50 to 75 K**	**4.6K**	**1.9K**	**Notes**
Static heat loads (W)	**210**	**10**	**18**	**1,2,3**
Dynamic heat loads (W)				
Total heat loads (W)	**210**	**10**	**18**	

Notes

1. Static heat load to outer shield = 130 W conduction through supports + 80 W radiation and residual gas conducti
2. Static heat load estimate to 4.5K is from support analysis only.
3. Static heat load to 1.9K = 12 W conducton through supports + 6 W radiation. Radiation estimate assumes ε=0.1.

US LHC ACCELERATOR PROJECT

*brookhaven - **fermilab** - berkeley*

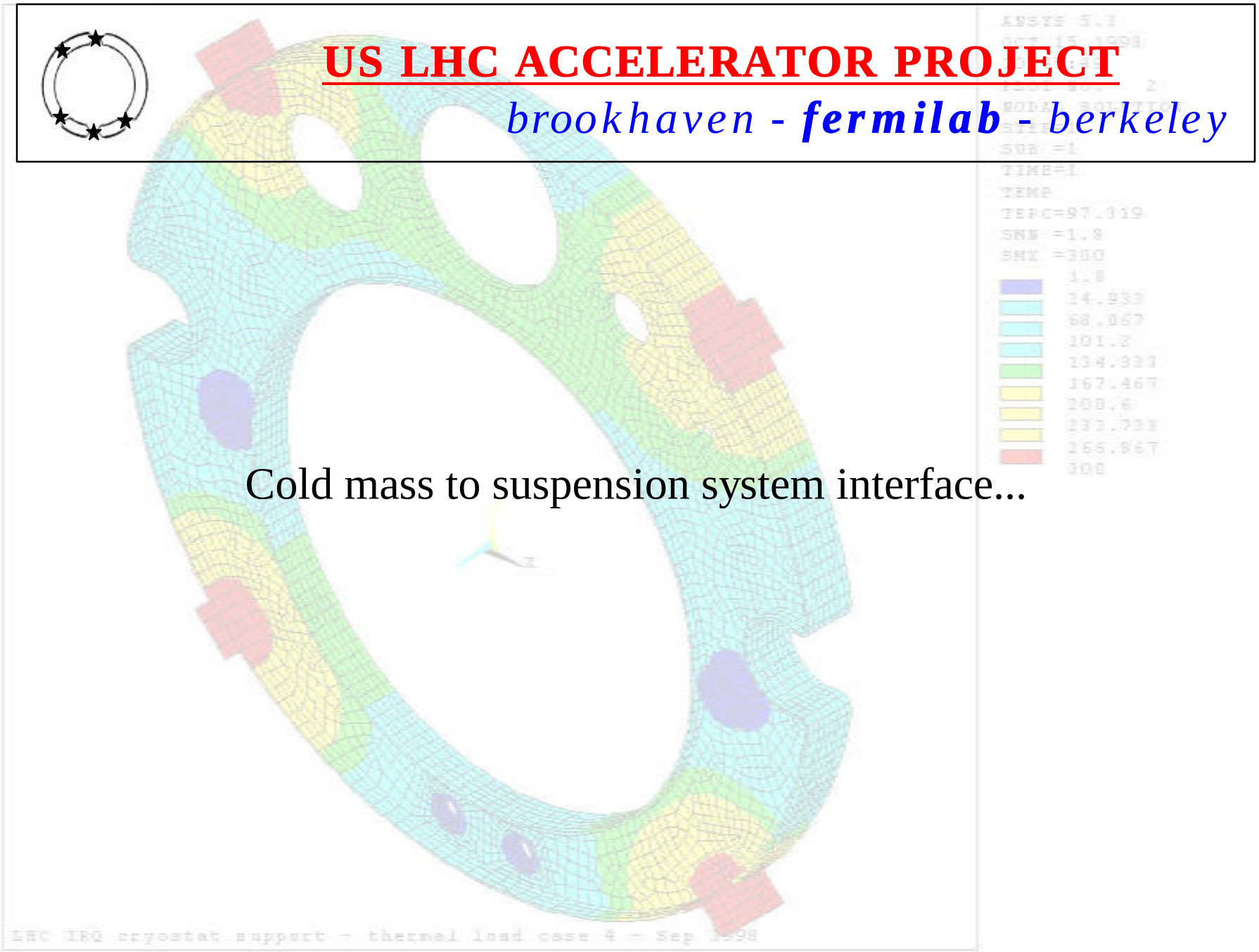

Cold mass to suspension system interface...

Support to cold mass connection

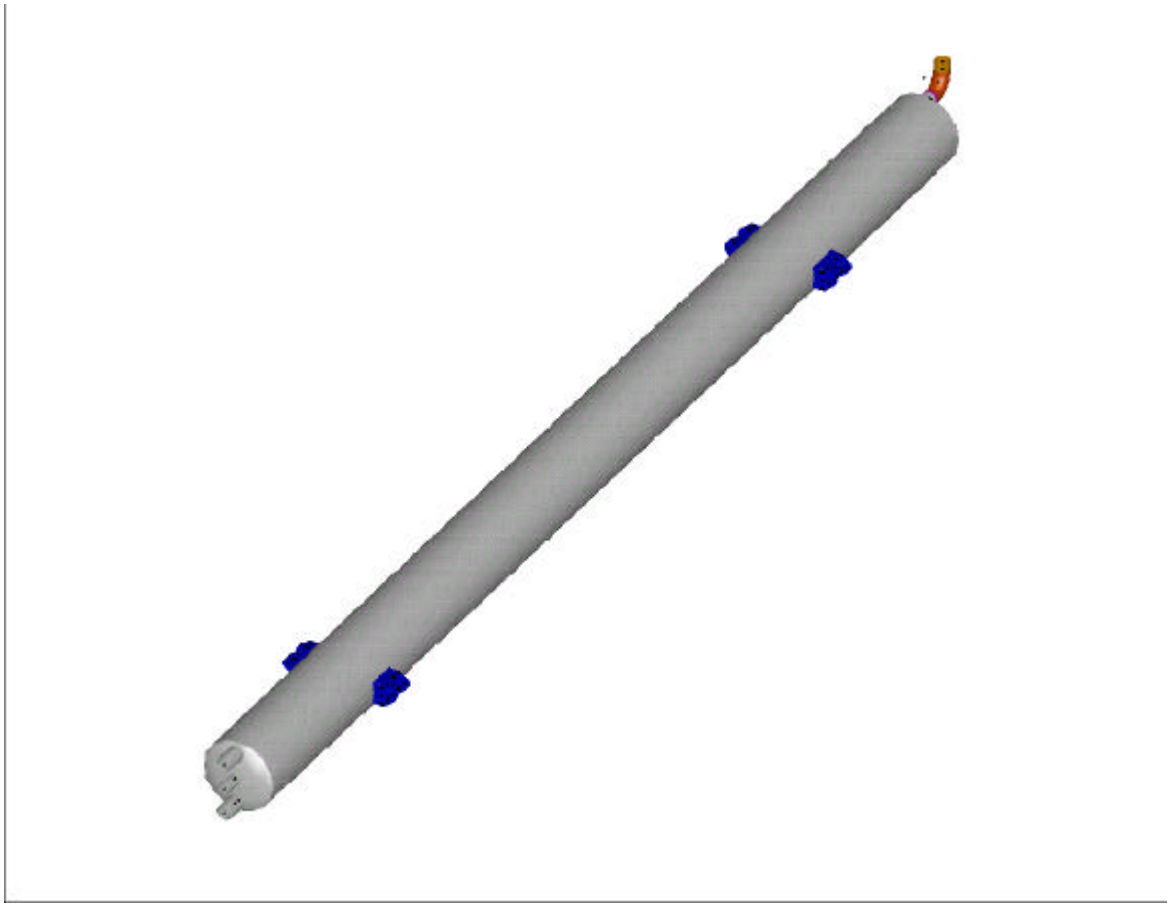

Support to cold mass connection

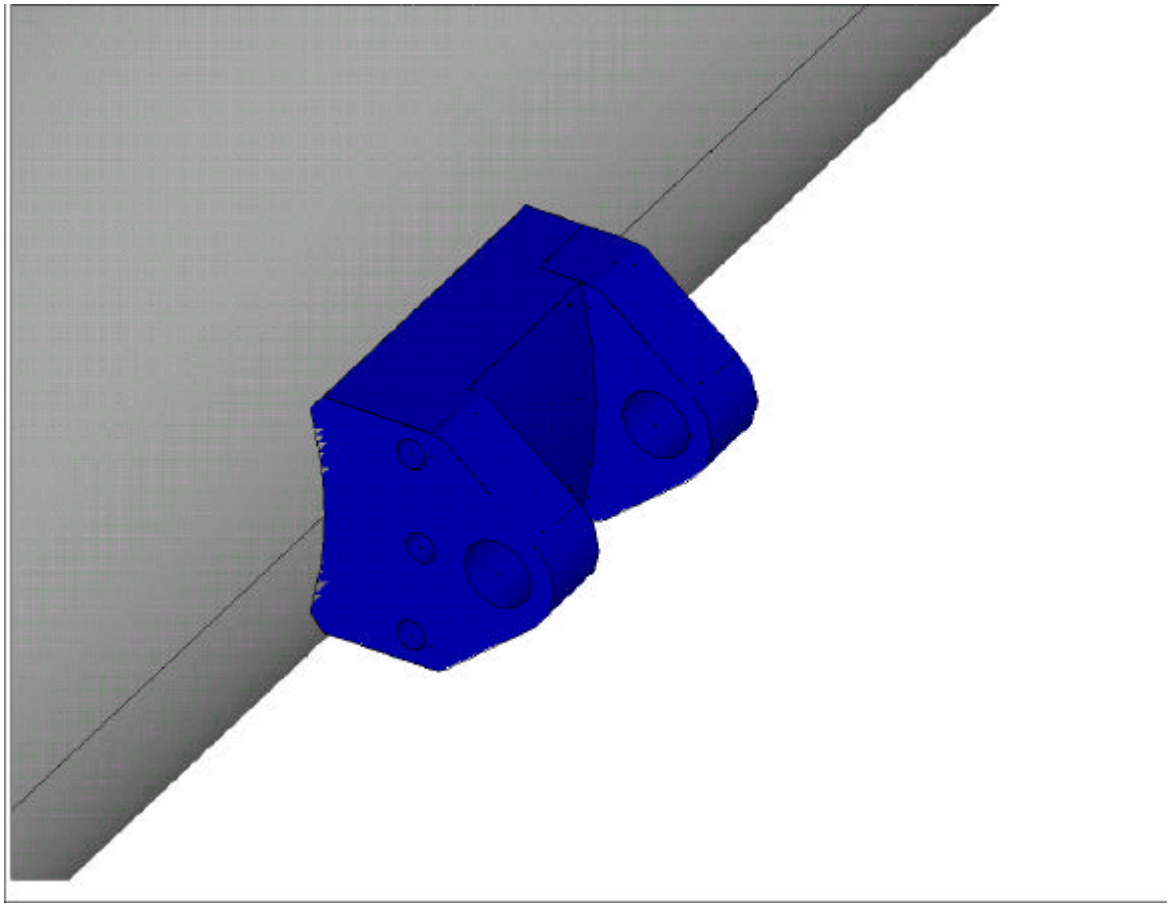

Support to cold mass connection

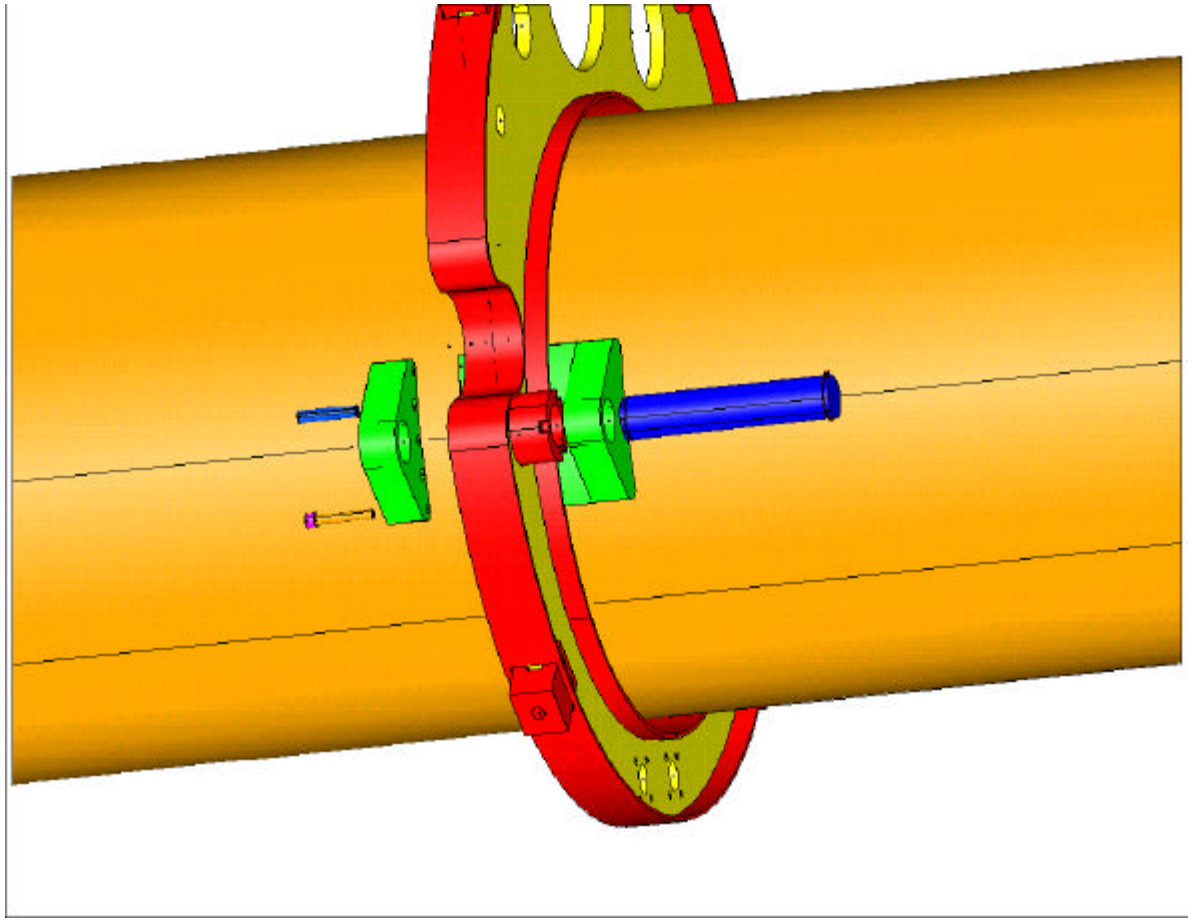

US LHC ACCELERATOR PROJECT

*brookhaven - **fermilab** - berkeley*

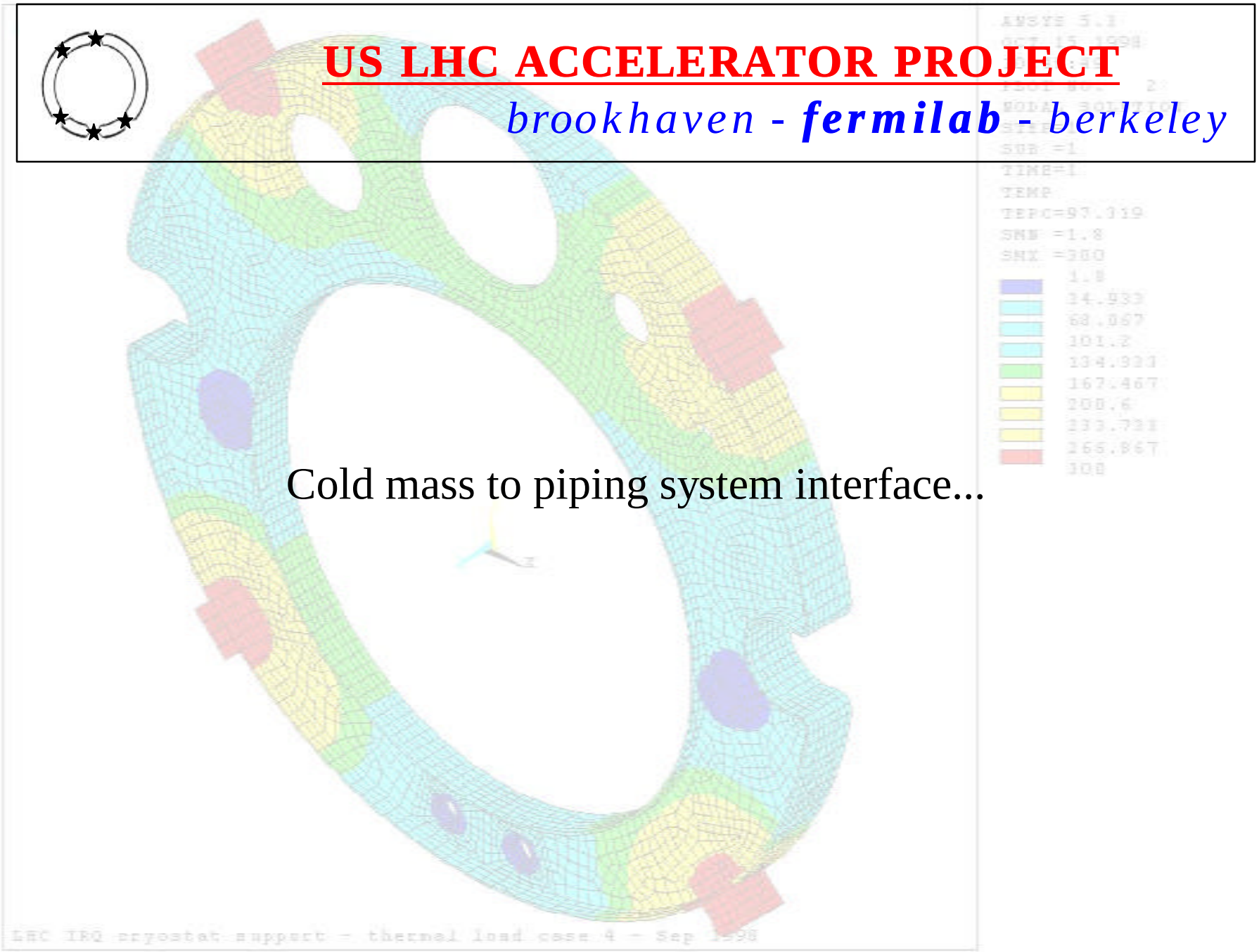

Cold mass to piping system interface...

Piping support design concept

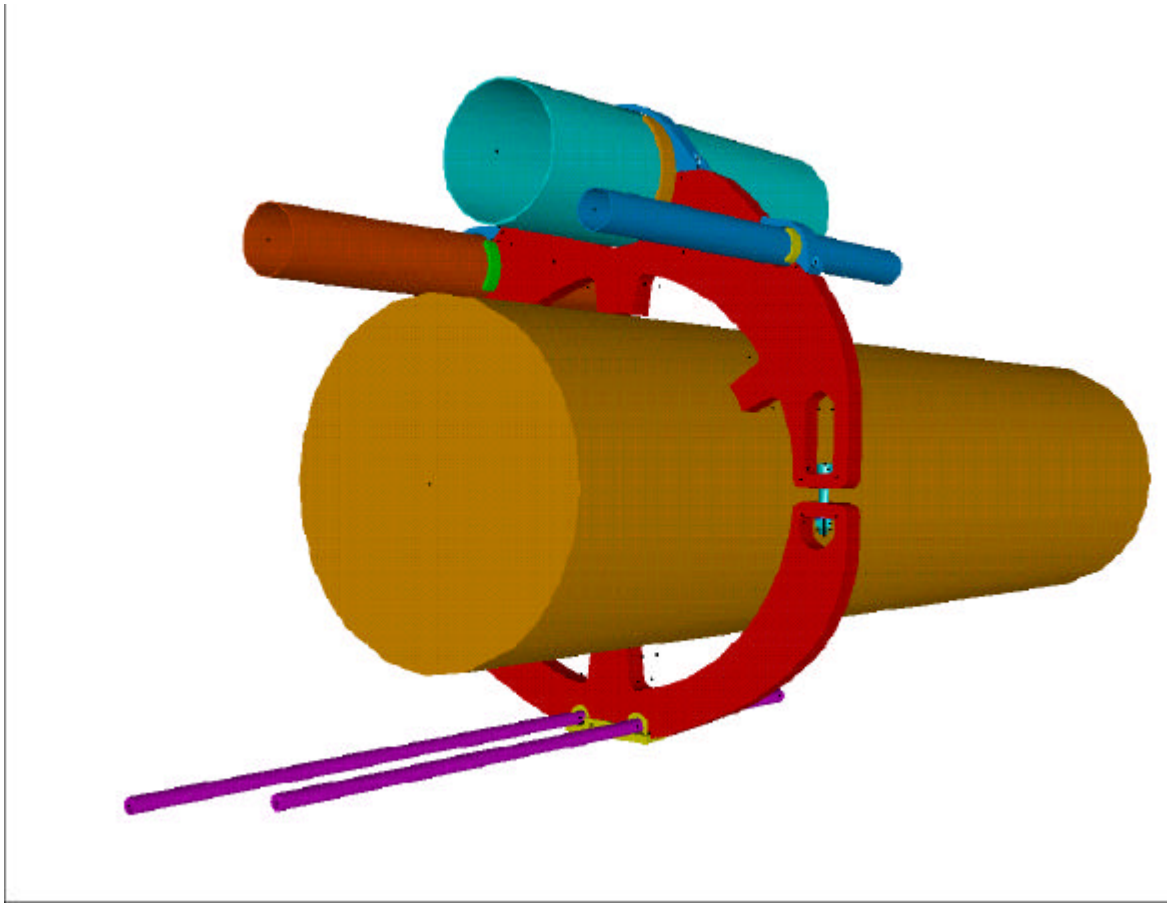

US LHC ACCELERATOR PROJECT

*brookhaven - **fermilab** - berkeley*

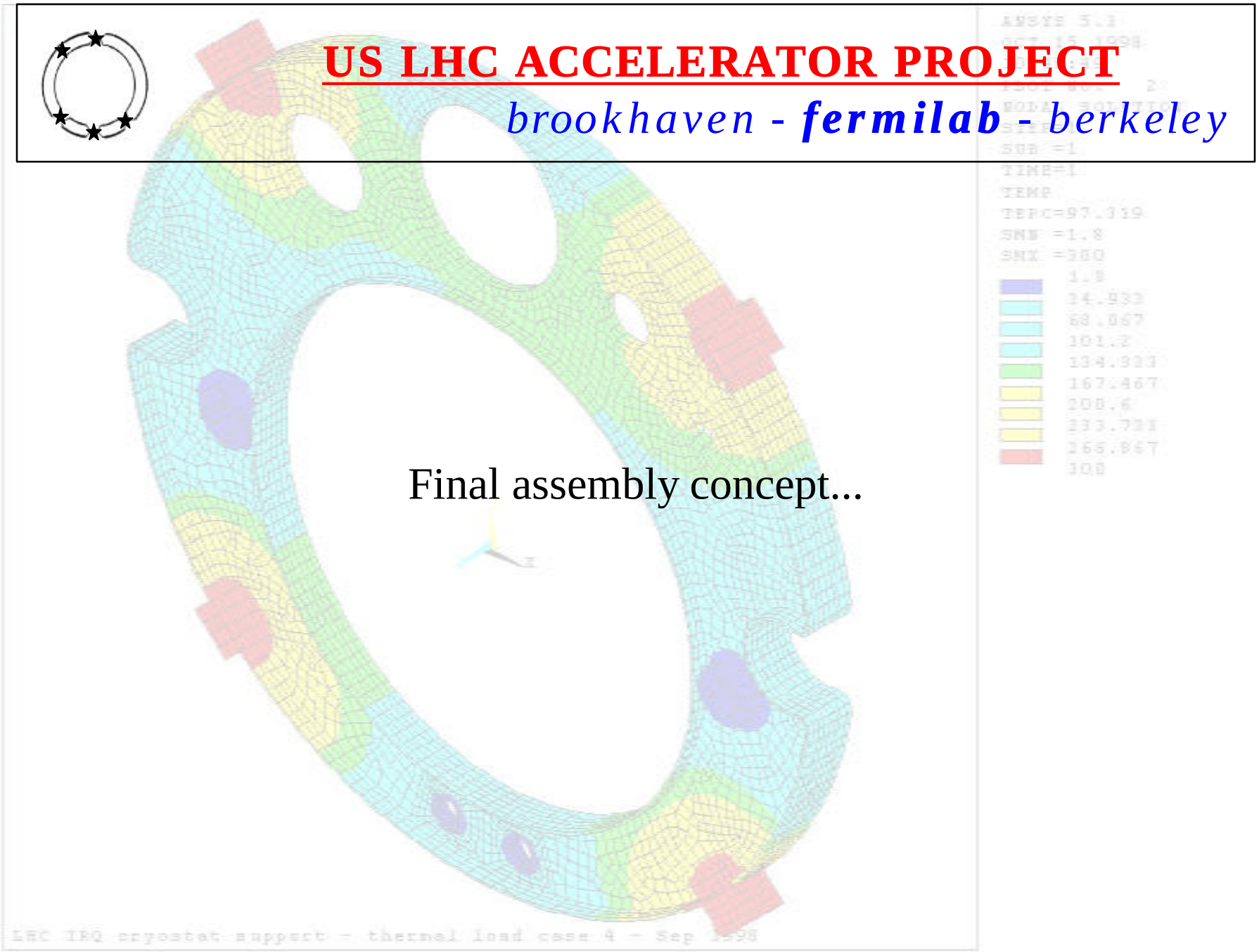

Final assembly concept...

Assembly tooling insertion beam

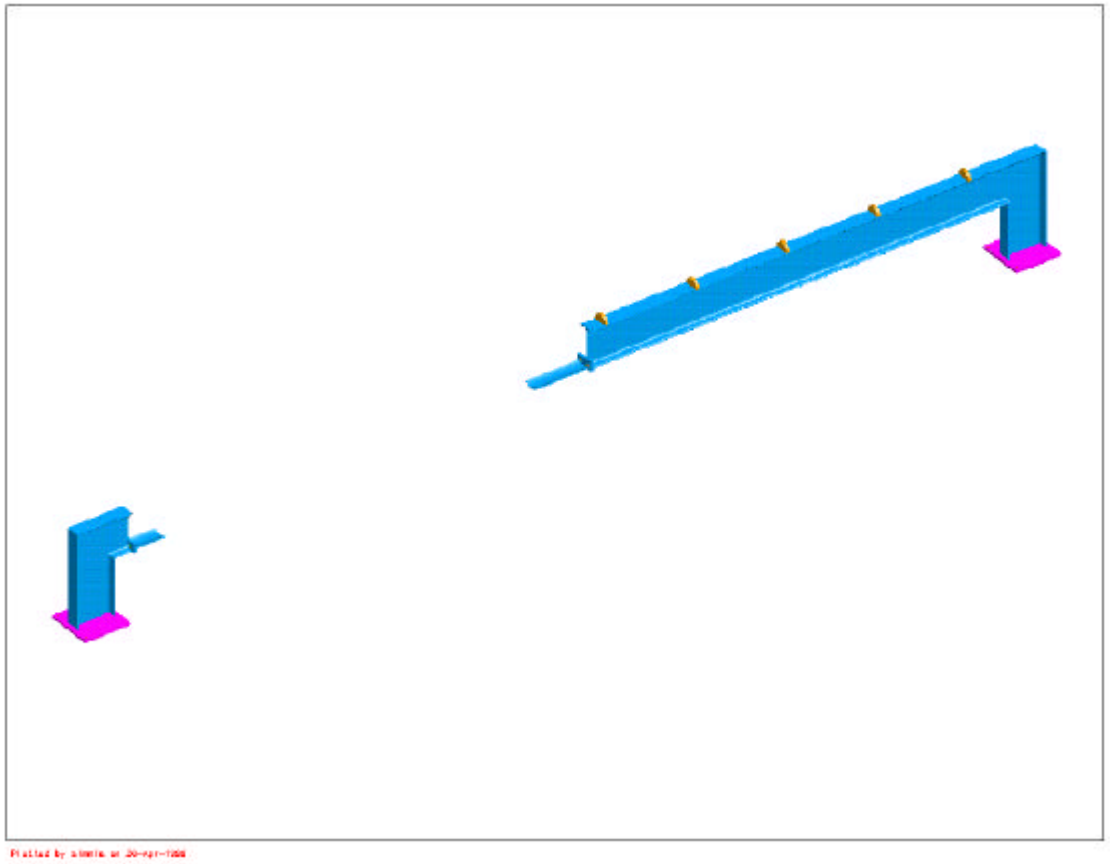

Assembly tooling insertion beam - initial setup

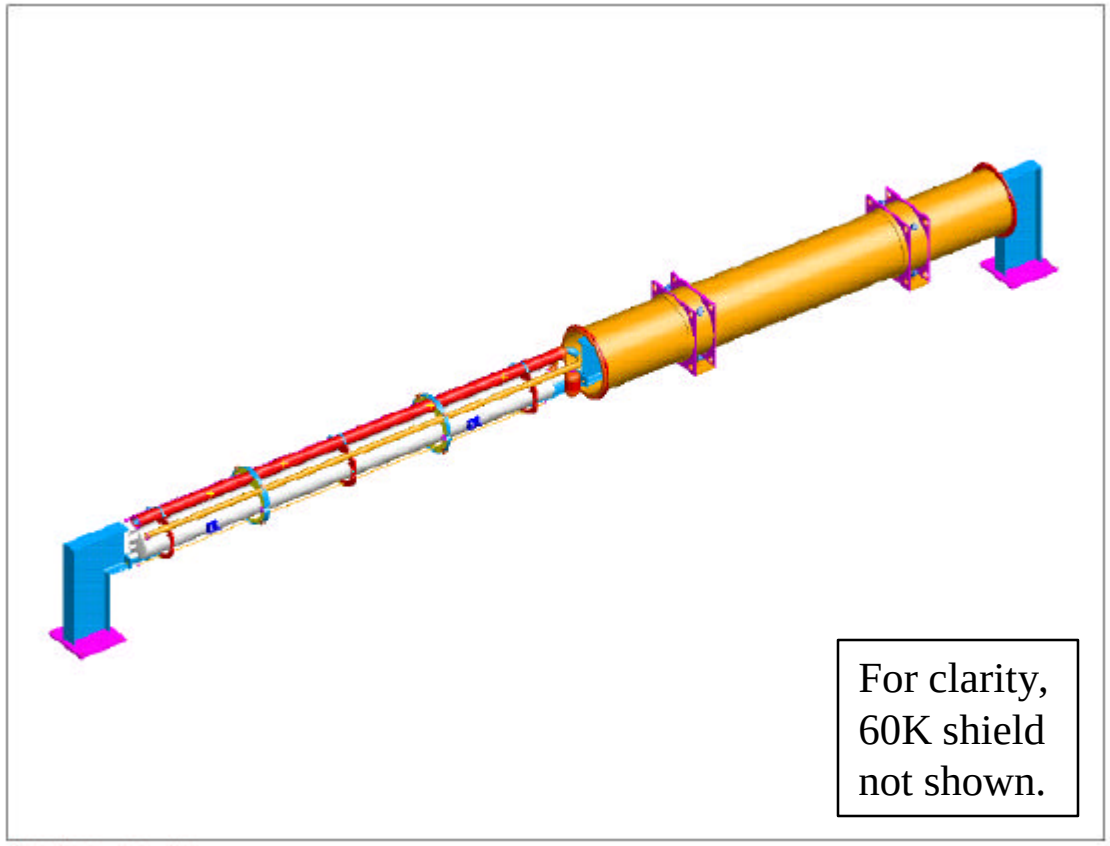

Assembly tooling insertion beam - insertion in progress

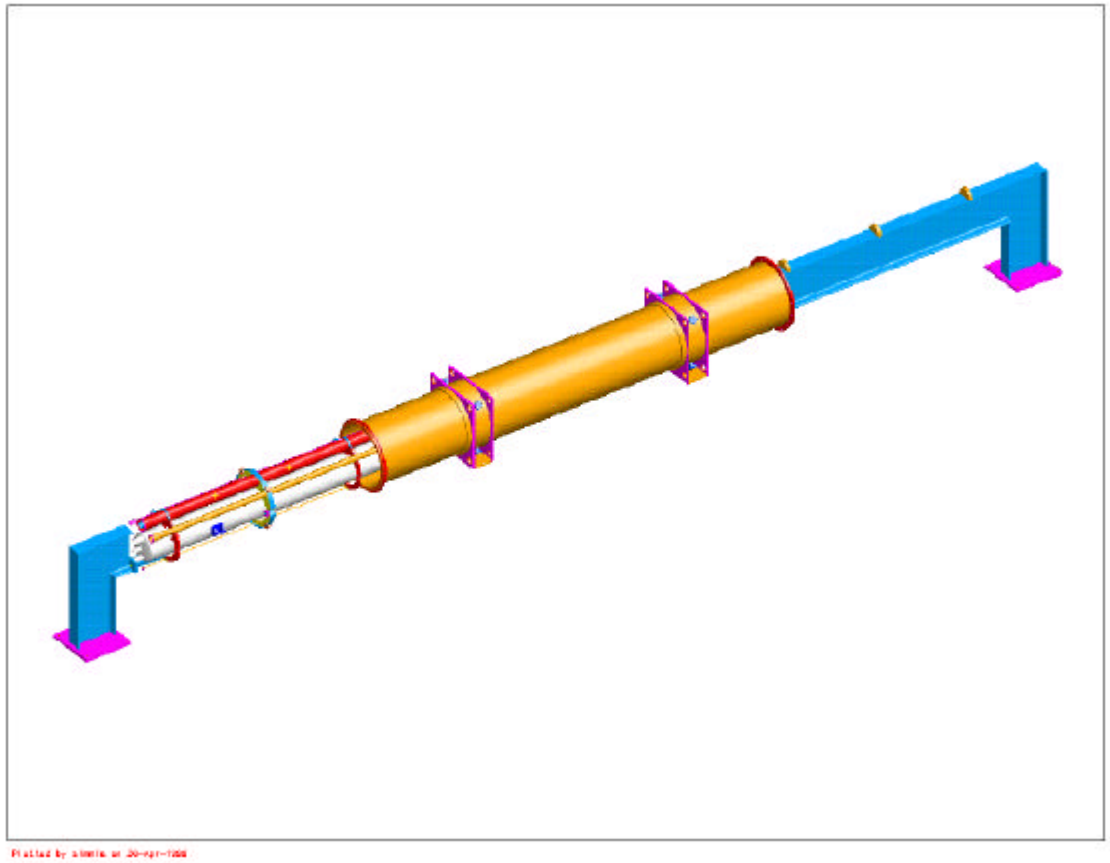

Assembly tooling insertion beam - insertion complete

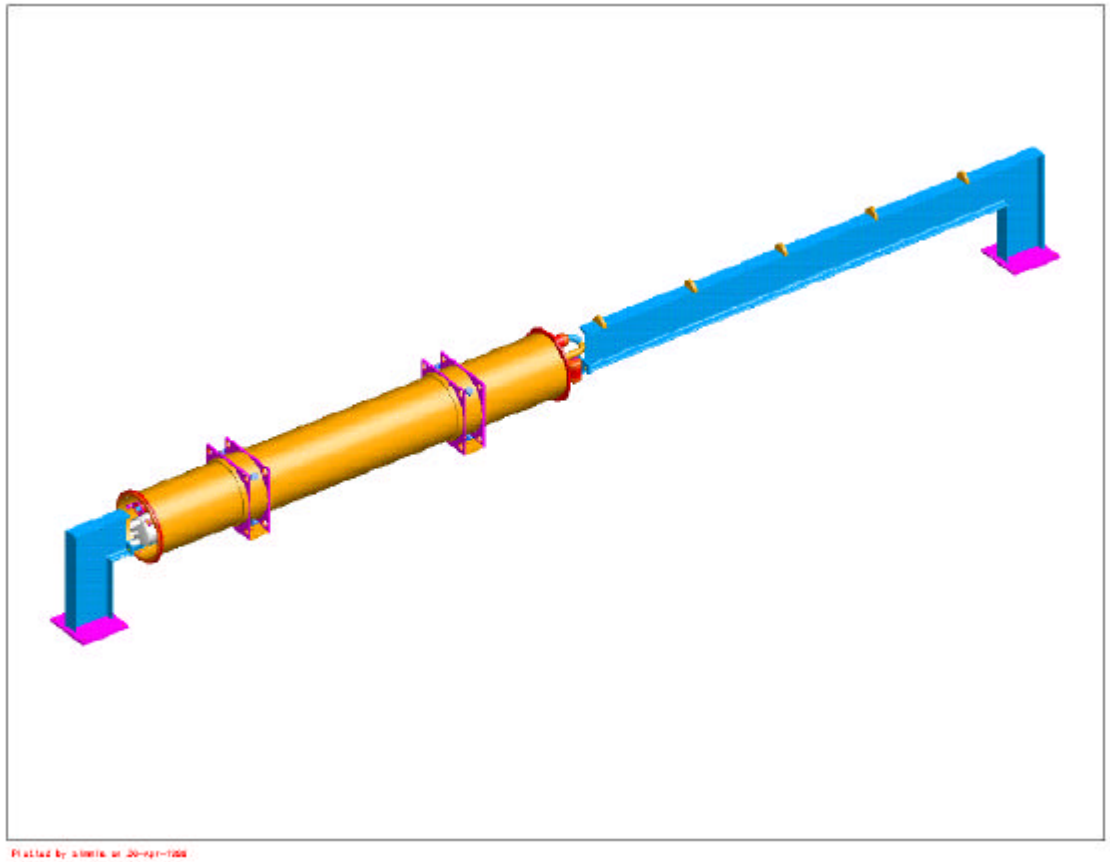

US LHC ACCELERATOR PROJECT

*brookhaven - **fermilab** - berkeley*

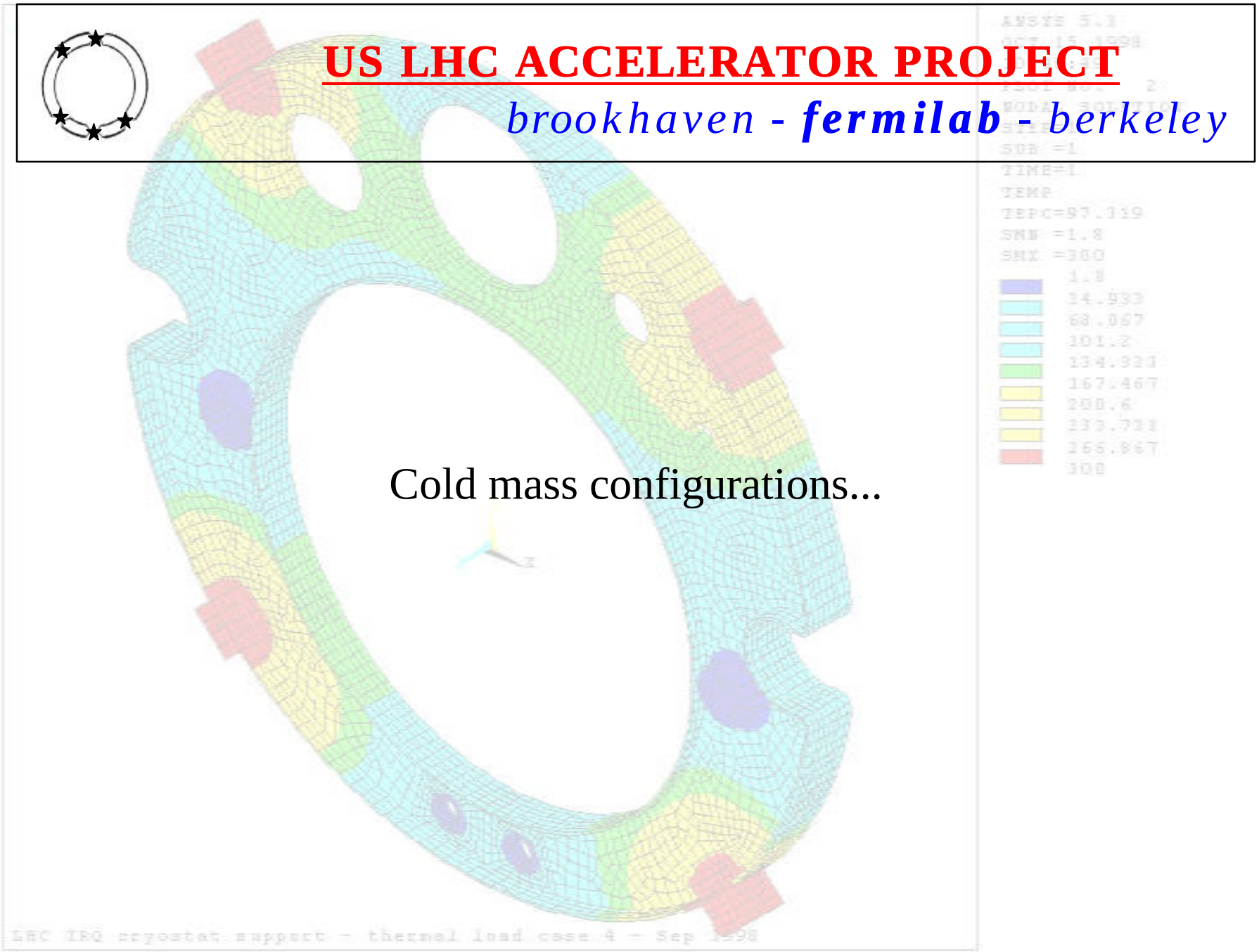

Cold mass configurations...

US LHC ACCELERATOR PROJECT

*brookhaven - **fermilab** - berkeley*

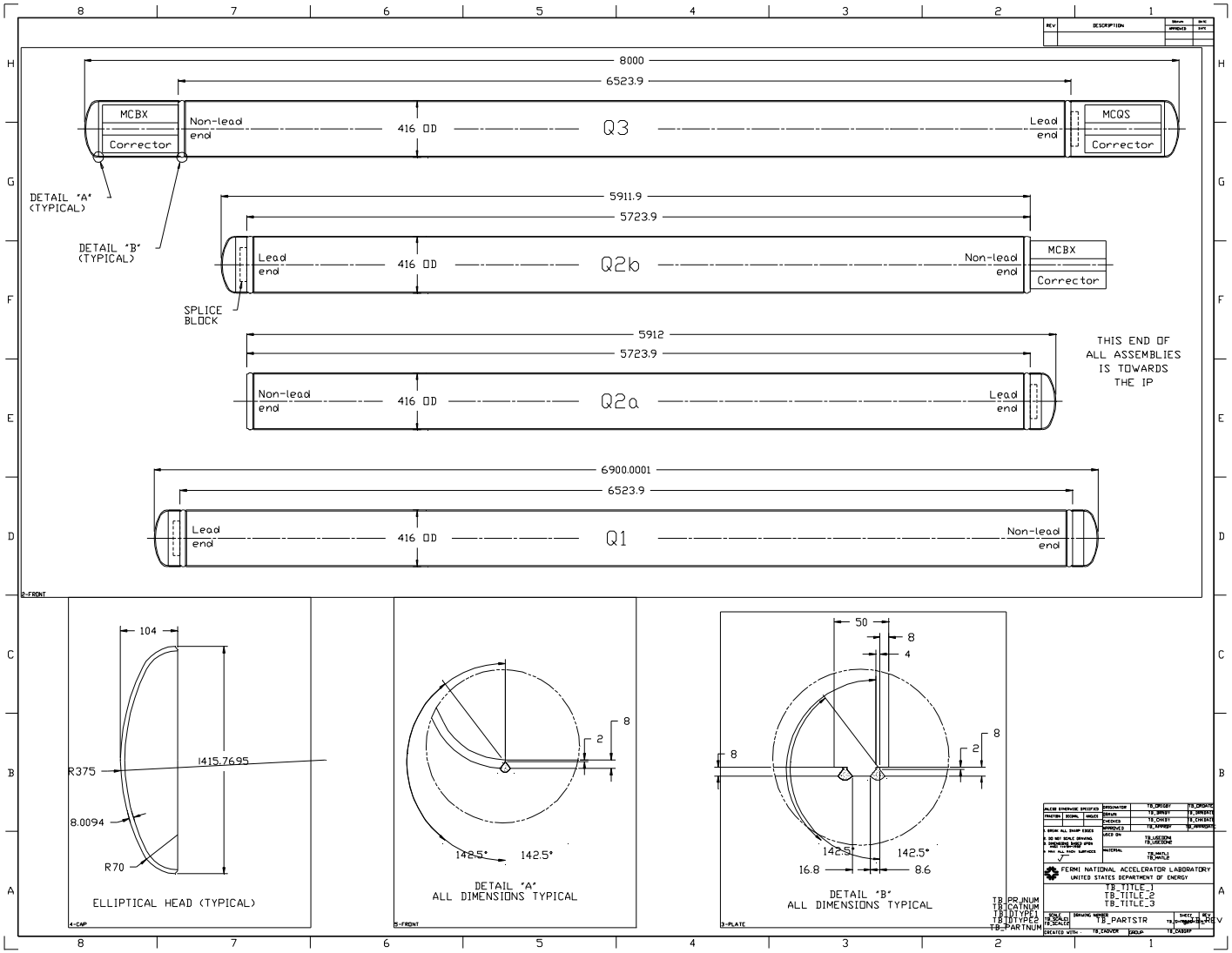

US LHC ACCELERATOR PROJECT

*brookhaven - **fermilab** - berkeley*

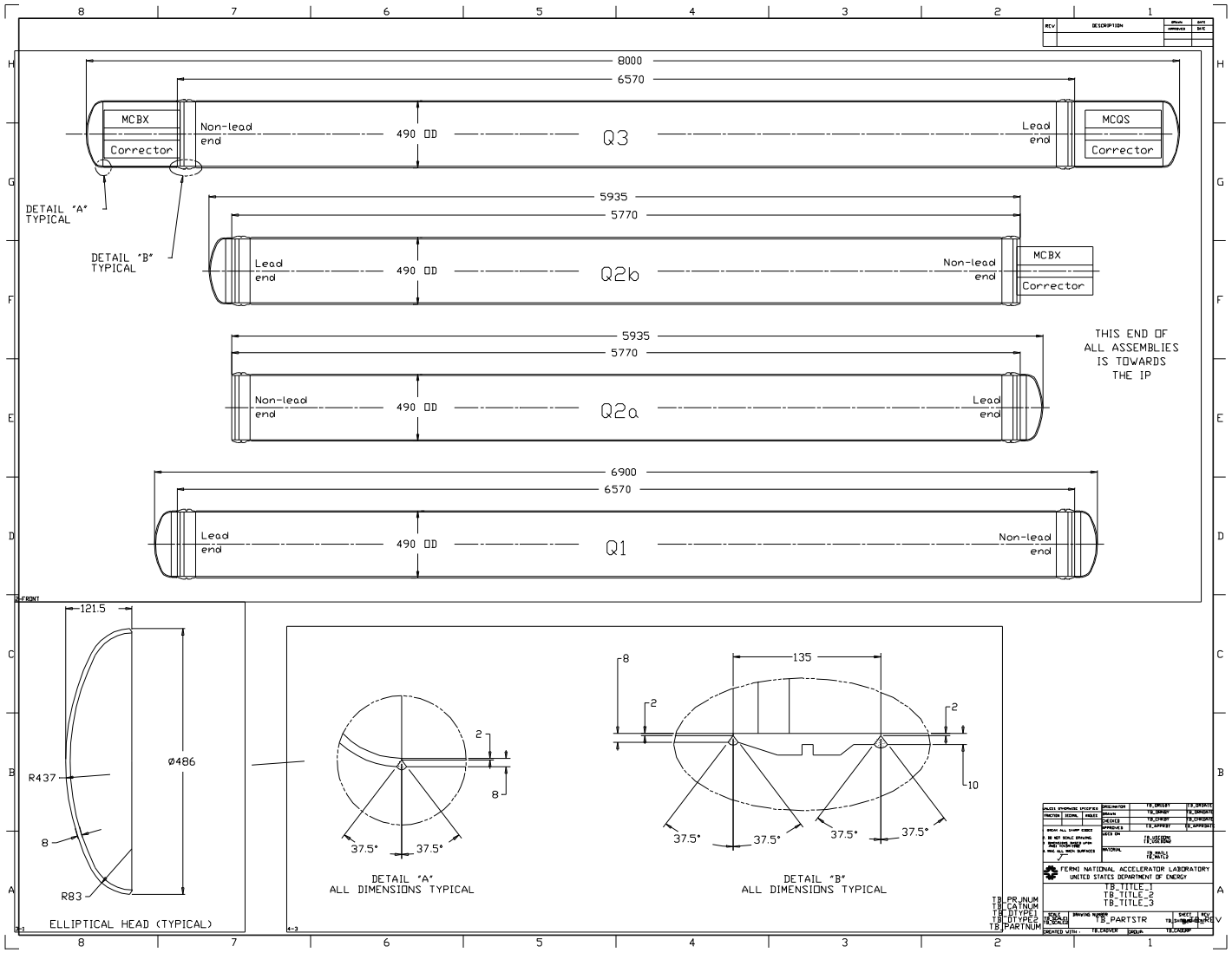

US LHC ACCELERATOR PROJECT

*brookhaven - **fermilab** - berkeley*

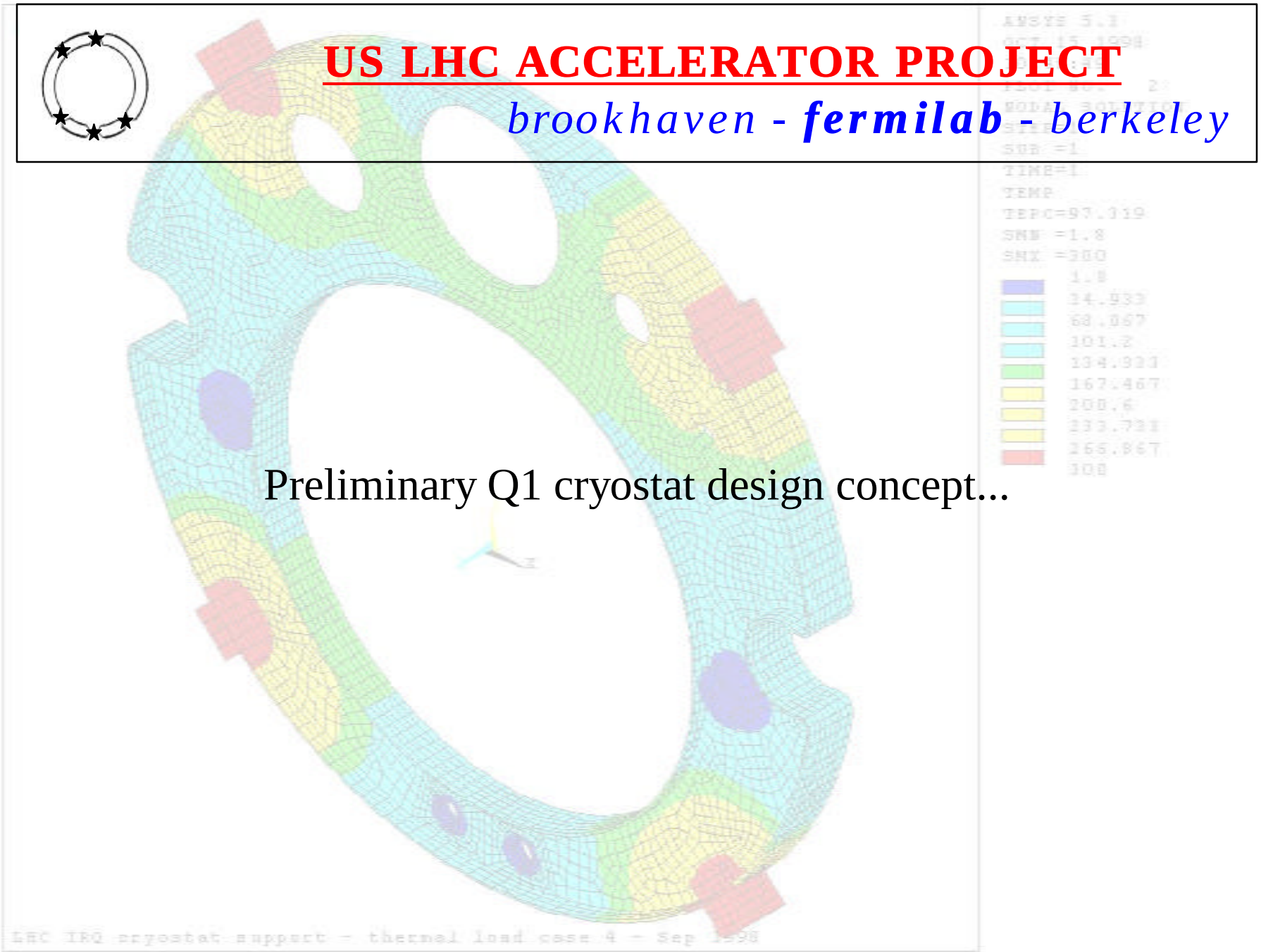

Preliminary Q1 cryostat design concept...

Current Q1 cryostat conceptual design

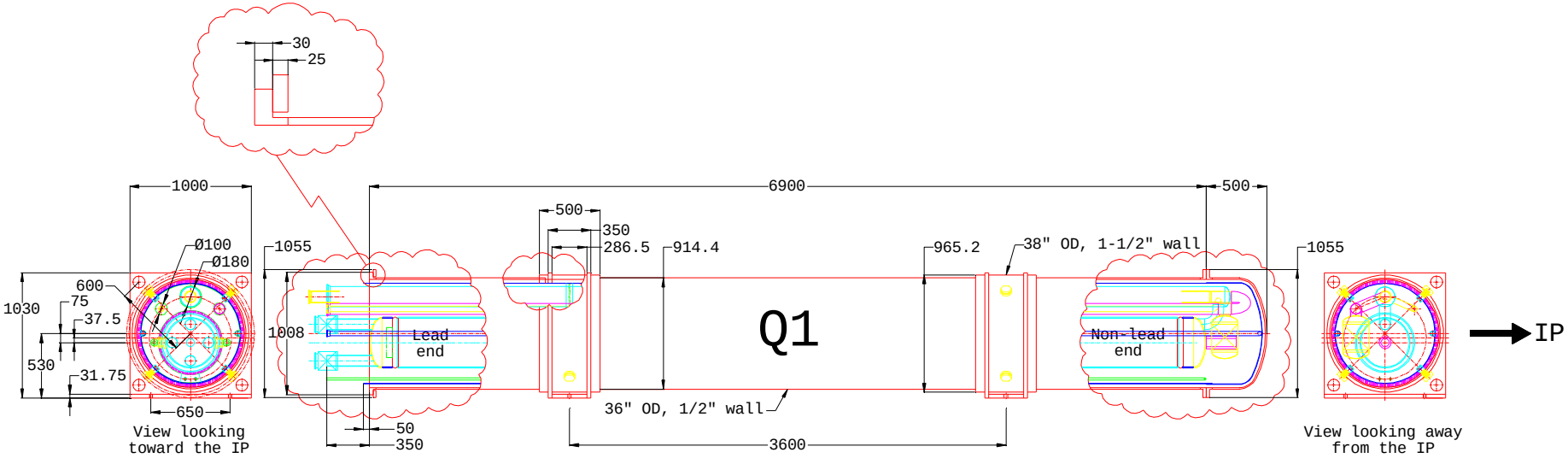

Current Q1 cryostat conceptual design

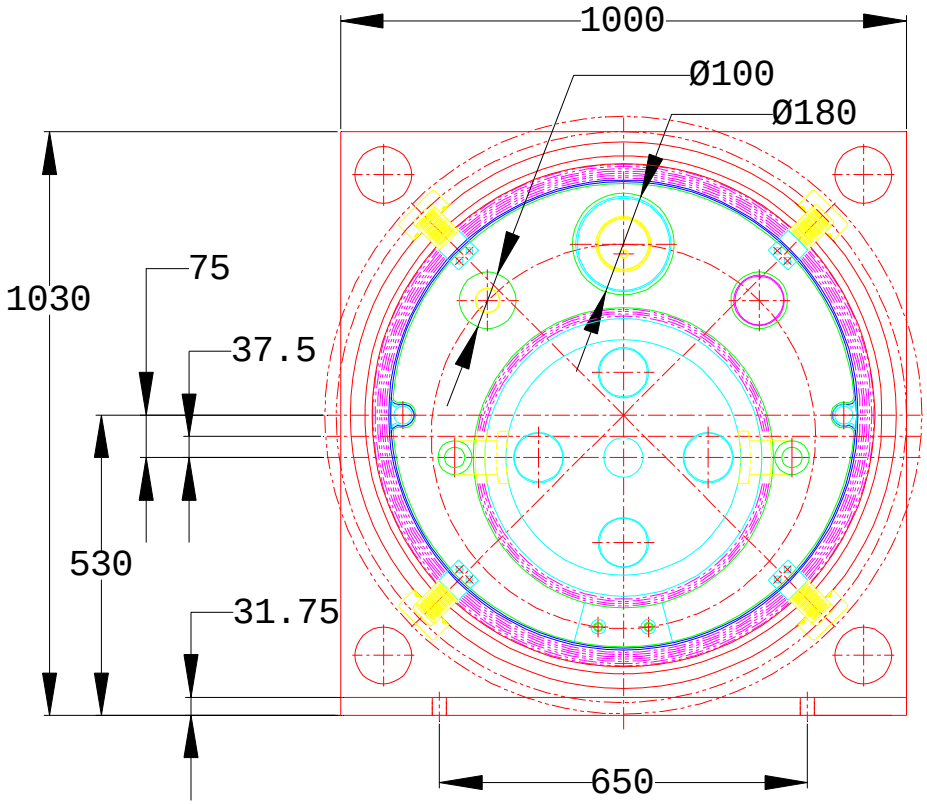

View looking toward the IP

Q1 vacuum vessel

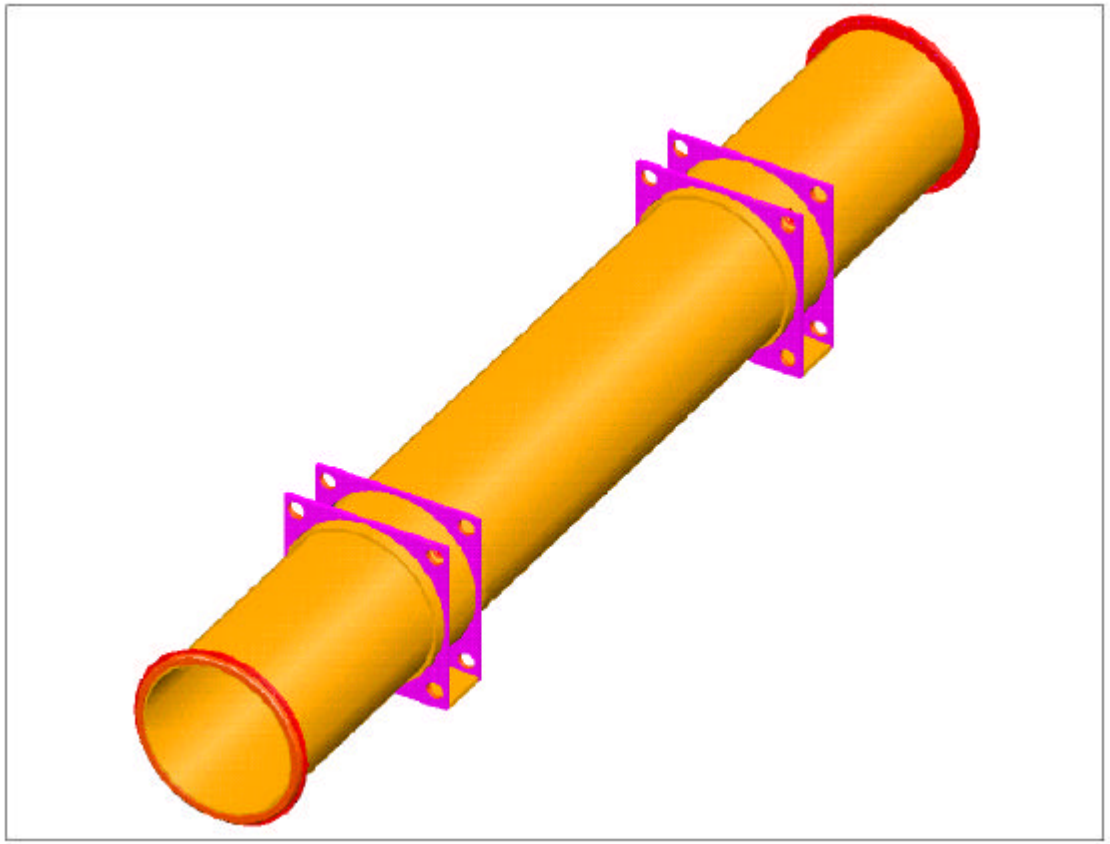

Q1 internal piping assembly

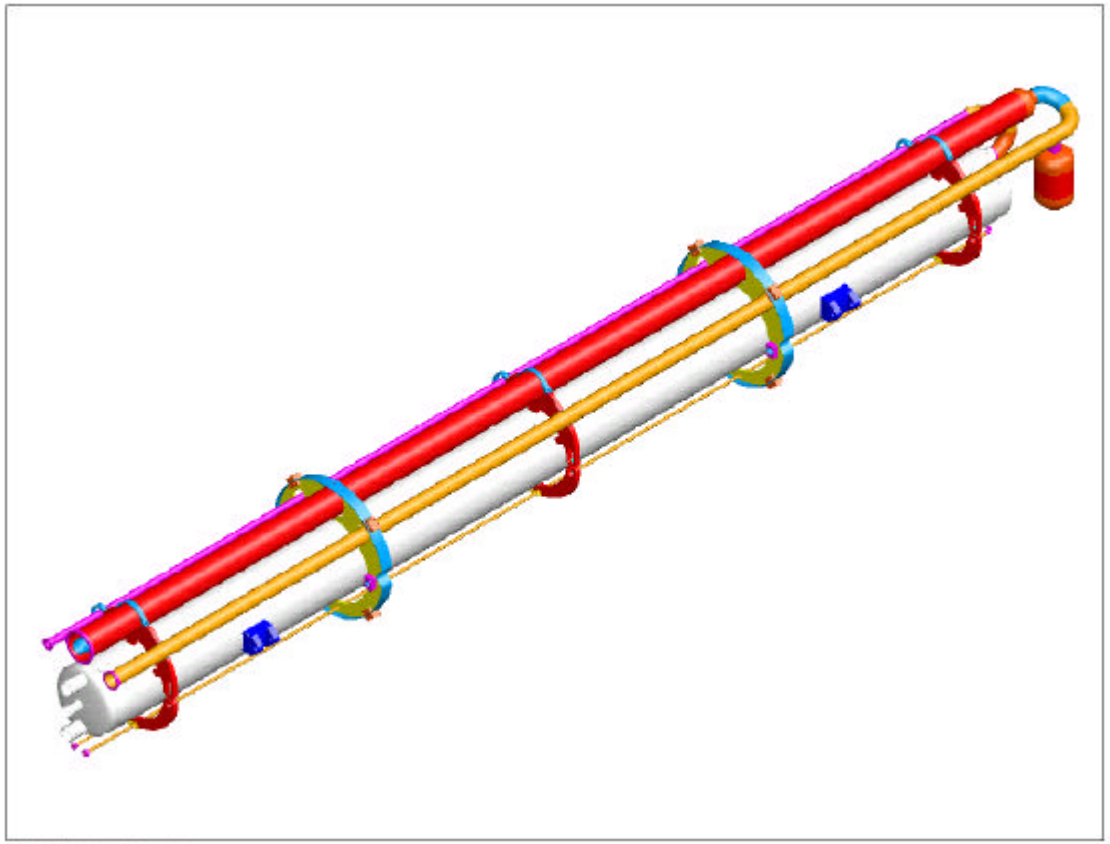

Q1 cryostat assembly (without end dome)

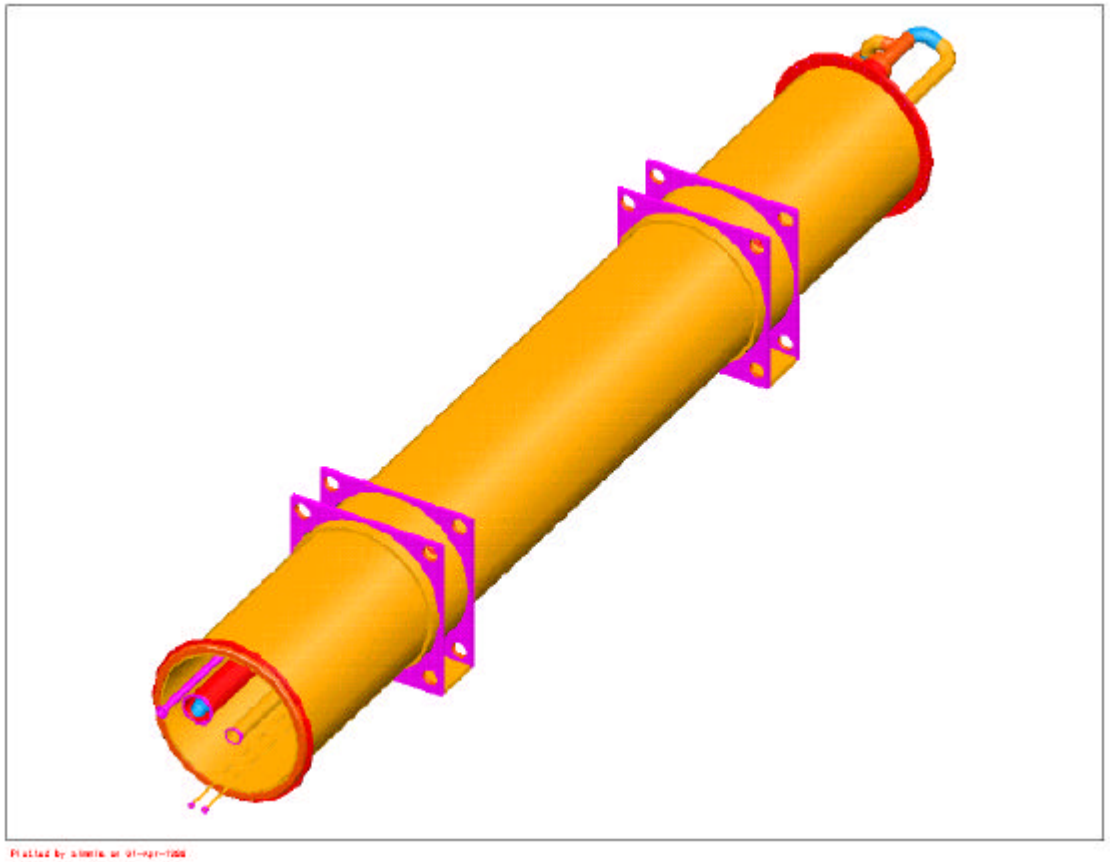

Concerns

- "Freezing" the design of non-Fermilab supplied interconnect components, especially BPMs, correctors, and beam tube details.
- Interconnection of the Q2a and Q2b.
- Coordination between Fermilab and KEK to standardize the cold mass mechanical and electrical connections and the end dome weld details.
- Availability of engineering resources for R&D (testing supports and support materials), design, and design qualification (e.g. shipping tests, etc.).