LHC IR Quadrupole Dimensions and Positions

Room temperature

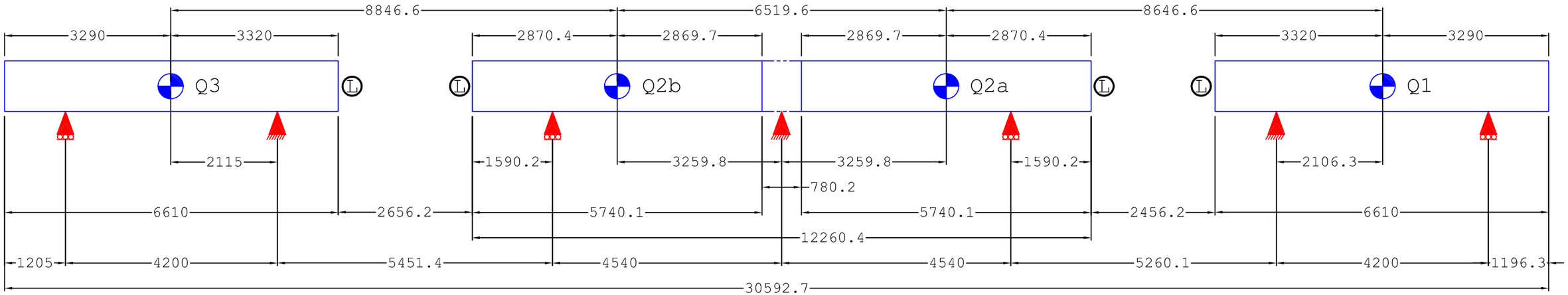

Operating temperature

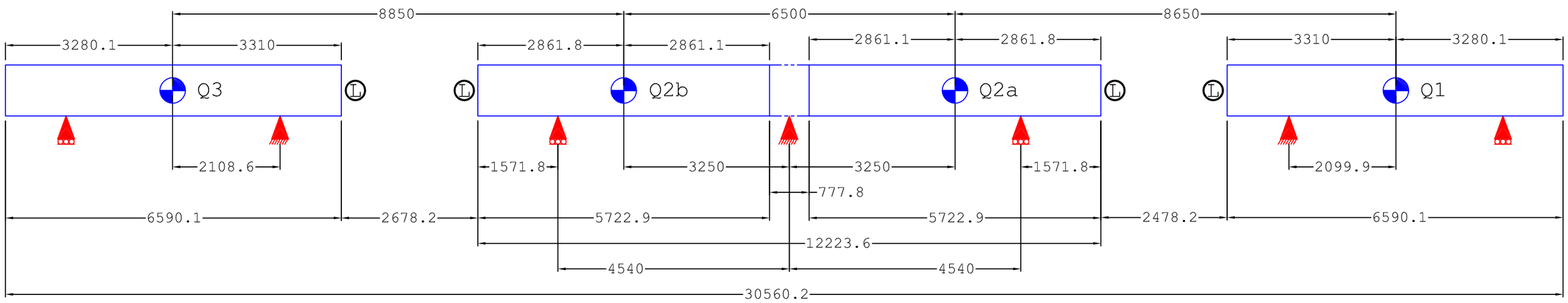

Magnetic center

Sliding internal support

Fixed internal support

Lead end

All cold mass dimensions are between end plates or end ring scribe marks

Assumed cold mass dimensions		
Room temperature	Q1/Q3	Q2a/Q2b
Between end plates or ring scribes	6610.0	5740.1
Lead end to magnetic center	3320.0	2870.4
Non-lead end to magnetic center	3290.0	2869.7

Operating temperature		
Between end plates or ring scribes	6590.1	5722.9
Lead end to magnetic center	3310.0	2861.8
Non-lead end to magnetic center	3280.1	2861.1

TNicol - May 27, 1999
Revised - June 14, 1999
Revised - August 23, 1999
Revised - November 3, 1999
Revised - May 5, 2000
Revised - April 13, 2001
Revised - May 4, 2001
Revised - April 4, 2005*

*: Q3 cryostat and cold mass moved toward IP 300 mm per 1993 corrector change. Q1 supports moved toward IP 8.7 mm per drawing error.