TEST notes on 1.3GHz single-cell cavity TE1AES004 11th VT in A0

Mingqi Ge, Elvin Harms, Peter Prieto, Marvin Olson

2010-1-11

1.3GHz single-cell Cavity TE1AES004 was manufactured by AES Corporation, and BCP'd 107.m; EP'd 65.m; and baked 120C 48 hrs. A huge pit (~1mm diameter) was found by Kyoto inspection machine. We made replica of this huge pit. In the earlier tests in IB1, the cavity performance was limited by FE, but the 5th test in IB1 demonstrated that FE was removed after HPR'd at ANL, the cavity achieved 39MV/m; the 6th test verified the molding material caused no degradation to cavity RF performance. This cavity was shipped to A0 kept under vacuum to verify the capability of A0 vertical test facility for high gradient 1.3GHz single-cell cavity, the cavity achieved 38.6MV/m and light FE; in 8th tests, the quench was detected at pit region by fast thermometers, the gradient was 37MV/m, light FE; the 9th test confirmed the quench location at pit region again by 4 fast thermometers which were put surrounding pit, but the cavity the gradient degrade to 32.5MV/m due to FE; the 10th test was for the second sound system commissioning in A0, and this test also confirmed the quench location changed above λ point. During the 7th to 11th tests in A0, the cavity was actively pumped.

In the 11th VT in A0, we prepared 4 more second sound detectors totally we had 8 detectors. We expected the second sound system would show the consistent quench location with the fast thermometer, which was the main purpose of this test. Another purpose was to continue observing the quench location changing to accumulate data for supporting flux movement theory. The cavity was kept under vacuum since last measurement.

Cavity test results

The cavity finally achieved 37.4MV/m, Q0=4.1E9 then quenched (see Fig1), light FE. The Multipacting triggered the first quench at 19~20MV/m, small amount of x-ray radiation was detected at the same time. The Multipacting always happened at this gradient level in past 5 tests at A0. After several self-processing, the X-ray level decreased but then re-started at 27MV/m. Above 31 MV/m the radiation detector outside the cave saturated at 30,000 cpm. Fig2 shows the radiation level recorded by the detectors inside the cave. At the quench point, the radiation level was 58.5 mR/hr.

We prepared 16 fast thermometers and mounted them evenly on the equator (see Fig3); the RTD#1 was right on the pit location. At 2K, The cavity firstly quenched around huge pit region (RTD#14-RTD#1), then we set the LHe bath temperature above λ point, after we cooled down back to 2K, quench location changed to RTD#4-5 region where it was 90deg away from RTD#1(see Fig3), But after a while (about 20 minutes), the quench location changed back to RTD#1 region, the cavity RF level remained same during quenching location changing. This phenomenon was also detected by second sound system simultaneously.

But above λ point, we saw very little temperature response from the fast thermometers (RTD#2~RTD#5 region) when the cavity quenching. The second sound system did not show any respond signal as it wound be expected.

The most interesting phenomenon is the second sound system detected the pre-quench signal (Fig 4). In Fig 3 (X-axis is time), the green trace (Ch4) was store energy, the blue (Ch1) and the turquoise (Ch2) trace were signal from second sound detectors. In Blue trace (Ch2), the small amplitude response which is closer to the quench moment was pre-quench signal, and the big amplitude signal was the quench signal. We did not observe the pre-heating correlated to pre-quench signal, but we will continue to observe in the future cavity tests.

Conclusion

We met the first test purpose, the second sound system showed consistent result with fast thermometers.

We also observed the quench location changing; this phenomenon was both detected by fast thermometers and second sound detectors. It could be caused by magnetic flux movement, or field emission, or all physics combined together. In order to get rid of FE interference, the cavity should be re-HPR'd. Table 1 is the summary of FE history.

We also observed the pre-quenching signal by second sound detectors.

For the A0 vertical test facility, we need to review the power interlock trigger level; it was triggered several times when the cavity went to high field with FE.

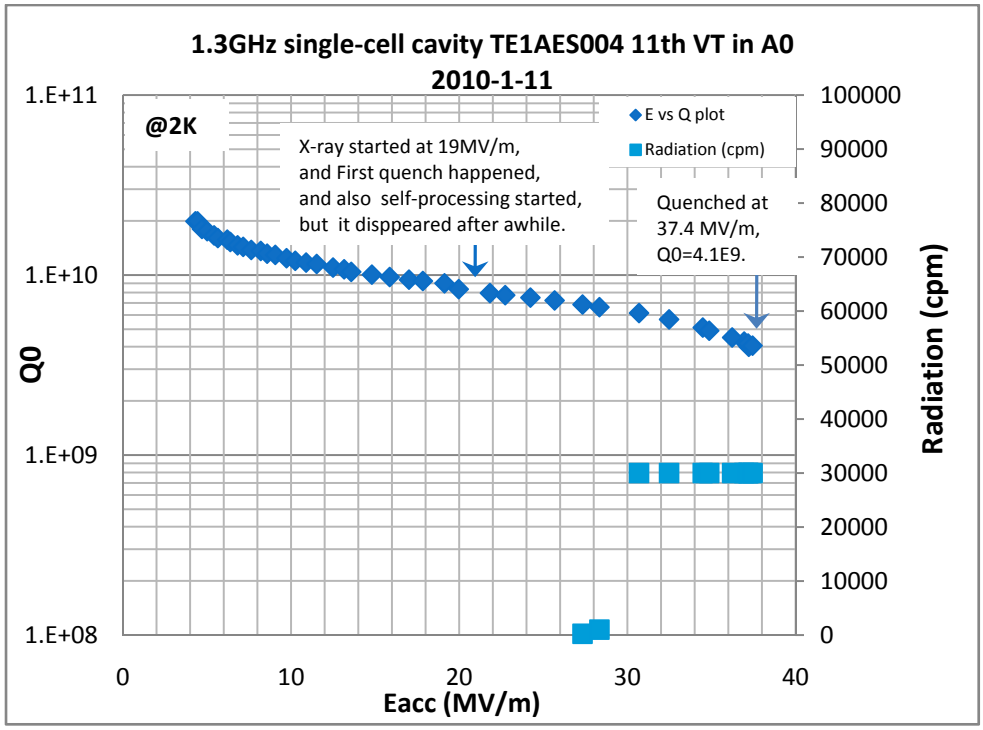
1.3GHz single-cell cavity TE1AES004 11th VT in A0
2010-1-11
@2K
X-ray started at 19MV/m,
and First quench happened,
and also self-processing started,
but it disppeared after awhile.
Quenched at
37.4 MV/m,
Q0=4.1E9.
E vs Q plot
Radiation (cpm)
Q0
Radiation (cpm)
Eacc (MV/m)
1.E+11
1.E+10
1.E+09
1.E+08
100000
90000
80000
70000
60000
50000
40000
30000
20000
10000
0
0
10
20
30
40

Fig1

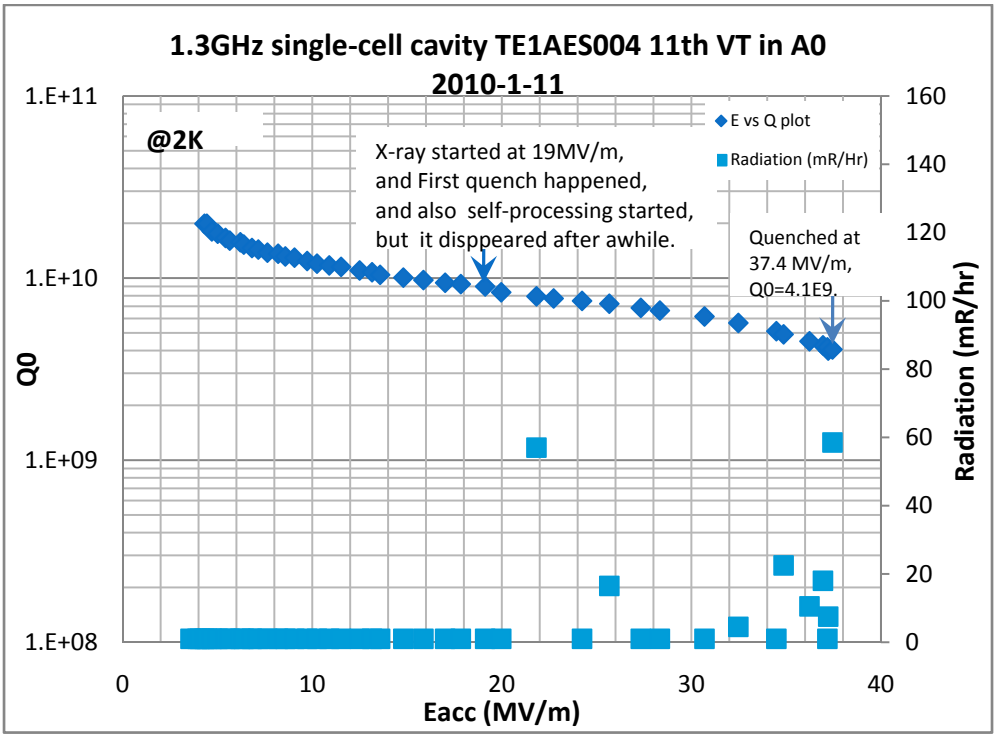
1.3GHz single-cell cavity TE1AES004 11th VT in A0
2010-1-11
@2K
X-ray started at 19MV/m,
and First quench happened,
and also self-processing started,
but it disppeared after awhile.
Quenched at
37.4 MV/m,
Q0=4.1E9.
E vs Q plot
Radiation (mR/Hr)
Q0
Radiation (mR/hr)
Eacc (MV/m)
1.E+11
1.E+10
1.E+09
1.E+08
160
140
120
100
80
60
40
20
0
0
10
20
30
40

Fig 2

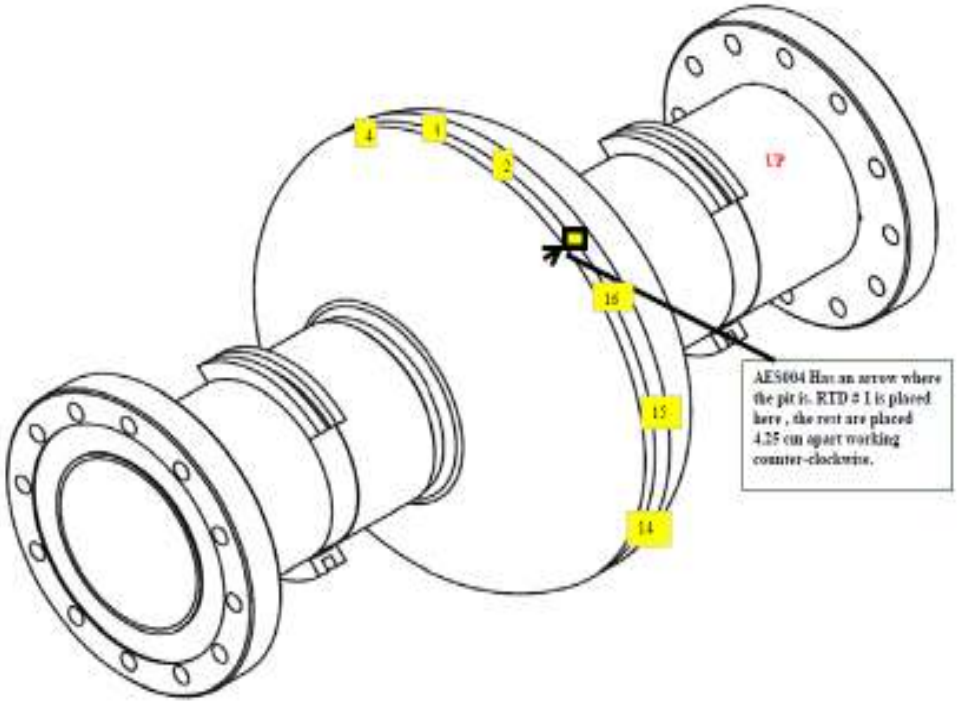
16
15
14
AE5004 Has an arrow where the pit is. RTD # 1 is placed here , the rest are placed 4.25 cm apart working counter-clockwise.

Fig 3

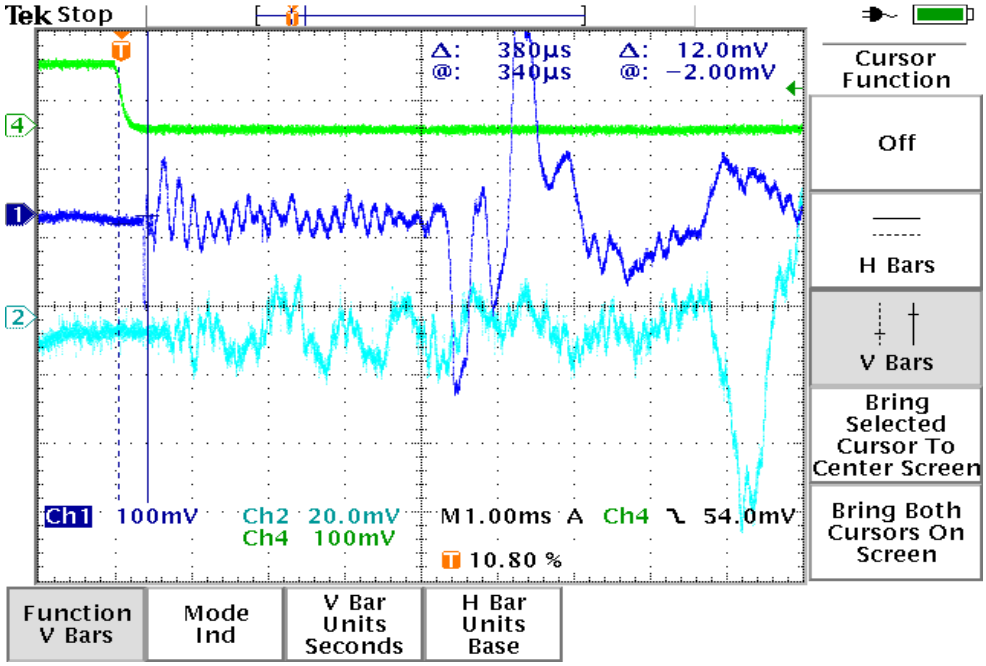
Tek Stop
Δ: 380µs
@: 340µs
Δ: 12.0mV
@: −2.00mV
Cursor Function
Off
H Bars
V Bars
Bring Selected Cursor To Center Screen
Bring Both Cursors On Screen
Ch1 100mV
Ch2 20.0mV
Ch4 100mV
M1.00ms A Ch4 54.0mV
10.80 %
Function V Bars
Mode Ind
V Bar Units Seconds
H Bar Units Base

Fig 4

Table 1. The summary of FE history

5th at IB1	FE free after HPR.	Quenched 39MV/m
6th at IB1	For the molding material test, No field emission, Then cavity was shipped to A0, the cavity was kept under vacuum.	Quenched 39MV/m
7th at A0	X-ray started at 19~20MV/m At 31.8MV/m, the radiation level > 30K cpm, At 38.6 MV/m, the radiation level is 25mR/hr.	Quenched 38.6MV/m
8th at A0	X-ray started at 19~20MV/m at 34.3MV/m, the radiation level > 30K cpm, at 36.9 MV/m, the radiation level is 50mR/hr.	Quenched 36.9MV/m
9th at A0	X-ray started at 19~20MV/m At 32.5MV/m, the radiation level > 30K cpm.	Quenched 32.5MV/m
10th at A0	X-ray started at 19~20MV/m At 33.8MV/m, the radiation level > 30K cpm.	Quenched 33.8MV/m
11th at A0	X-ray started at 19~20MV/m At 30.7MV/m, the radiation level > 30K cpm.	Quenched 37.4MV/m