ITEM	DESCRIPTION	QTY.REQD.	MATERIAL	SPECIFICATION
1	CERAMIC	1	Al_2O_3	KYOCERA A473
Ⓑ 2	SLEEVE	1	Ti	
3	PIN	1	Mo	
4	WASHER	1	Fe-Ni-Co Alloy	IN ACCORDANCE WITH"ASTM F15"
5	FLANGE	1	Ti	

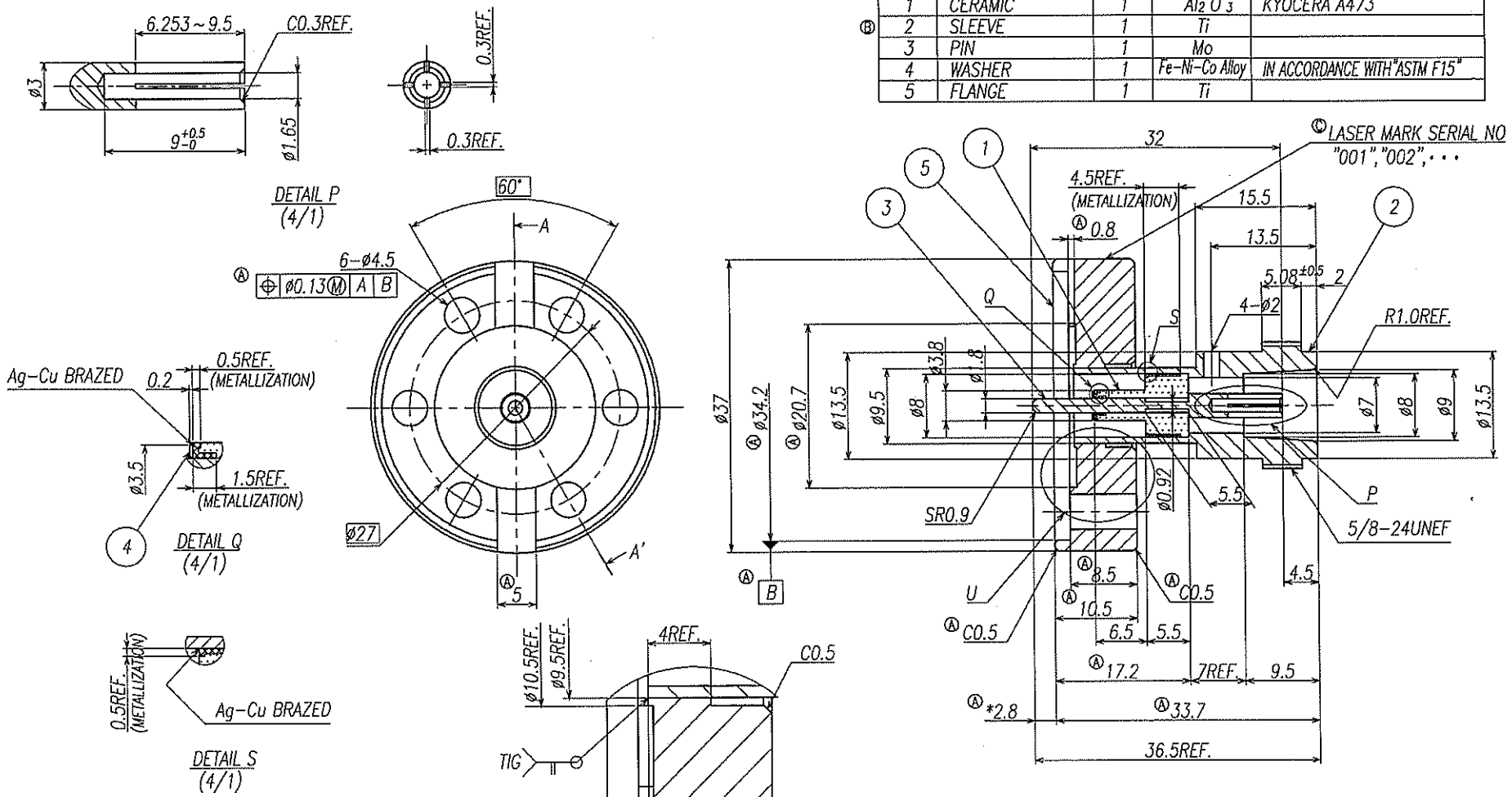

NOTES
1. ▩ SHADED AREAS OF ① SHOW METALLIZATION. (Mo-Mn+Ni PLATED)
2. ③ TO BE PLATED WITH NICKEL BEFORE BRAZING.
3. BRAZE JOINTS MATERIAL : Ag-Cu ALLOY.
4. HERMETICITY : $1.3X10^{-10}$ Pa m^3/s ;He.
5. BAKEOUT TEMPERATURE 300°CMAX.
6. VOLTAGE D.C.1.0kV MAX.
7. ALL CORNERS TO BE CHAMFERED OR ROUNDED TO 0.3MAX.
Ⓐ 8. MARKED * DIMENSIONS(1 PLACES) ARE MEASURED AT QA SECTION.
9. ALL DIMENSIONS ARE IN MILLIMETERS.
10. OTHER SPECIFICATION : "MES-2001"

No.	DATE	CHANGED		APPROVED	CONFIRMED	DRAWN
©	Sep.06.'07	ADD LASER MARK SERIAL NO		H.Shutoh	H.Ohguro	H.Ohmura
Ⓑ	Aug.30.'07	CHANGE ②		H.Shutoh	H.Ohguro	H.Ohmura
Ⓐ	Apl.03.'07	CHANGE ②,⑤ FORM ,CHANGE NOTE.8		H.Shutoh	h.Ohguro	H.Ohmura

KYOCERA

SCALE: 2:1

CUSTOMER: FERMI LAB

CUSTOMER DWG:

NAME: N-TYPE FT-Ti

UNITS: mm

APPROVED	CONFIRMED	CONFIRMED	CONFIRMED	DRAWN
Mar.26.'07	Mar.26.'07	Mar.26.'07	Mar.26.'07	Mar.26.'07
H.Shutoh	A.Ichikawa	Y.Okuda	H.Ohguro	H.Ohmura

TOLERANCES: UNLESS OTHERWISE SPECIFIED ±0.5

DWG No. GMM-A7113C

ALL RIGHTS RESERVED. PASSING ON AND COPYING OF THIS DOCUMENTS, USE AND COMMUNICATION OF ITS CONTENTS NOT PERMITTED WITHOUT WRITTEN AUTHORIZATION FROM KYOCERA.