REV.	DESCRIPTION	DRAWN	DATE
		APPD.	DATE
---	NEW RELEASE - ER #7554	JSB	9/15/03

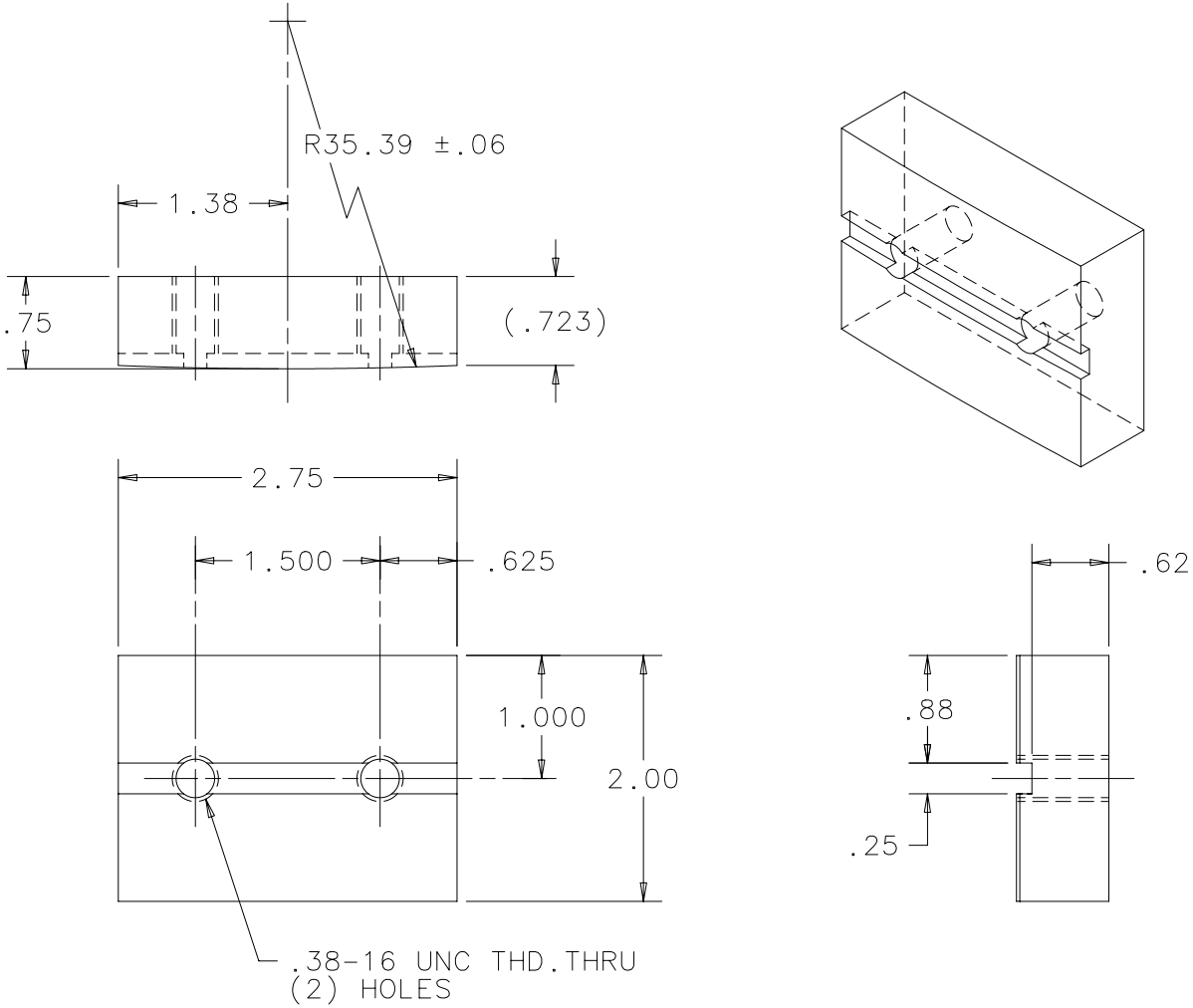

NOTES:

1) MATERIAL SHALL BE 304 STAINLESS STEEL AND MEET ASTM MATERIAL SPECIFICATION SA-240.

2) 125 uin MAXIMUM SURFACE FINISH ON ALL UN-MACHINED SURFACES.

ITEM	PART NO.	DESCRIPTION OR SIZE	QTY.

PARTS LIST

UNLESS OTHERWISE SPECIFIED			ORIGINATOR	G.APOLLINARI	
.XX	.XXX	ANGLES	DRAWN	G.ZIELBAUER	9/15/03
± .01	± .005	± 2°	CHECKED	J.BRANDT	9/15/03
1. BREAK ALL SHARP EDGES .02 MAX.			APPROVED		
2. DO NOT SCALE DRAWING. 3. DIMENSIONS BASED UPON ANSI Y14.5M-1982			USED ON	5520-ME-424037	
4. MAX. ALL MACH. SURFACES 63 √			MATERIAL	SEE NOTE	

FERMI NATIONAL ACCELERATOR LABORATORY
UNITED STATES DEPARTMENT OF ENERGY

CKM VACUUM VETO SYSTEM
VVS WELDMENTS - COMPLETE
RING MOUNTING BLOCK

SCALE	FILMED	DRAWING NUMBER	REV.
FULL		5520-MB-424048	

CREATED WITH I-DEAS 8m4 | USER NAME: brandt

INCHES 0 1 2 3 4 5 6 METRIC 0 10 20 30 40 50 60 70 80 90 100 110 120 130 140 150