REV.	DESCRIPTION	DRAWN	DATE
		APPD.	DATE
---	NEW RELEASE - ER #7554	JSB	9/16/03

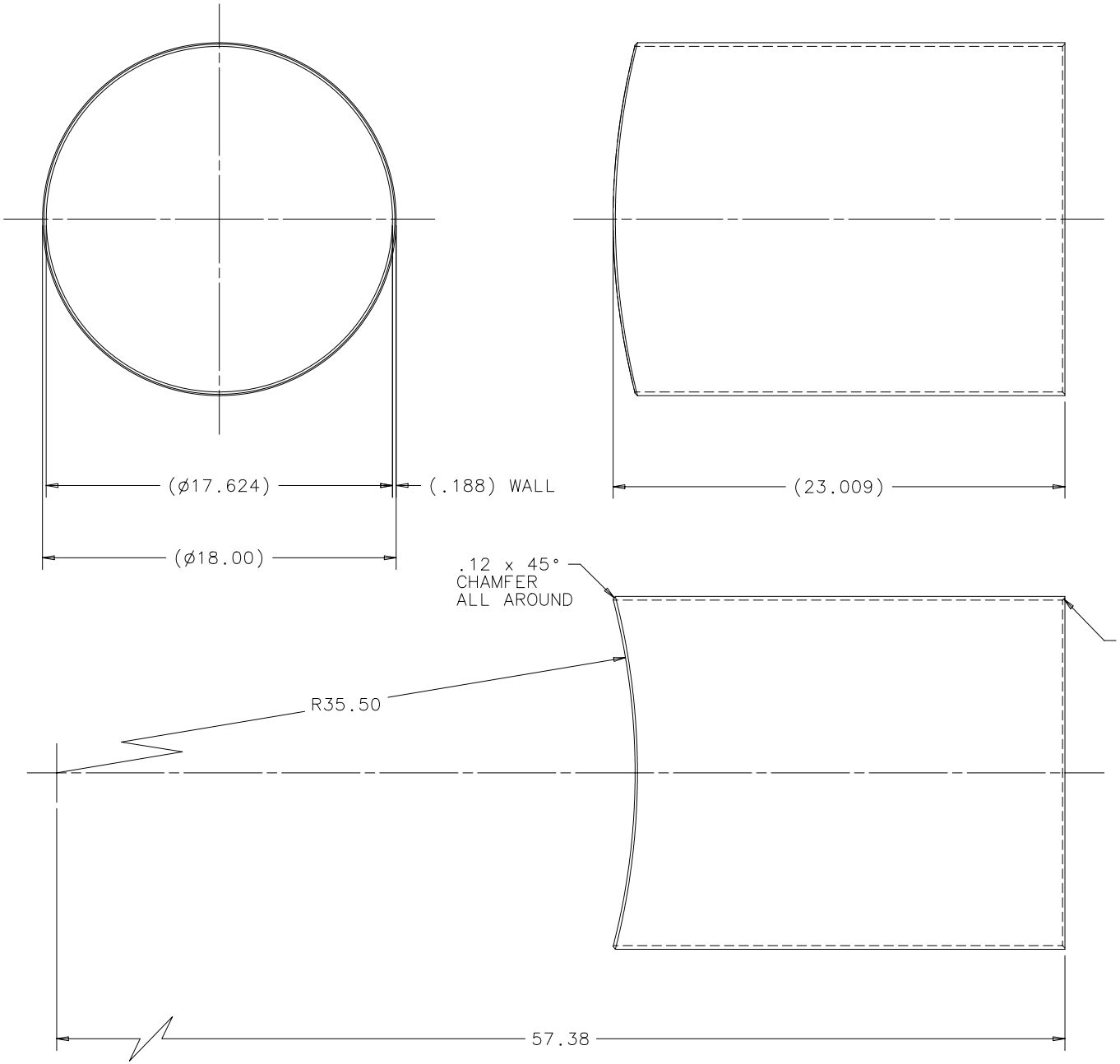

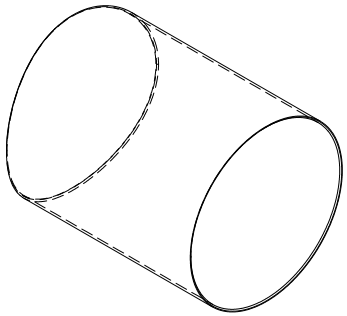

ISOMETRIC

SCALE 1:8

NOTES:
1) MATERIAL SHALL BE 18" SCHEDULE 10S CARBON STEEL PIPE. MEETING ASTM MATERIAL SPECIFICATION SA-53 OR SA-106.

ITEM	PART NO.	DESCRIPTION OR SIZE	QTY.

PARTS LIST

UNLESS OTHERWISE SPECIFIED			ORIGINATOR	G.APOLLINARI	
.XX	.XXX	ANGLES	DRAWN	G.ZIELBAUER	9/16/03
± .03	± .005	± 2°	CHECKED	J.BRANDT	9/16/03
			APPROVED		
			USED ON	5520-ME-424037	
			MATERIAL	SEE NOTE	

1. BREAK ALL SHARP EDGES .02 MAX.
2. DO NOT SCALE DRAWING.
3. DIMENSIONS BASED UPON ANSI Y14.5M-1982
4. MAX. ALL MACH. SURFACES 125√

FERMI NATIONAL ACCELERATOR LABORATORY
UNITED STATES DEPARTMENT OF ENERGY

CKM VACUUM VETO SYSTEM
VVS WELDMENTS - COMPLETE
18" PORT TUBE

SCALE	FILMED	DRAWING NUMBER	REV.
1:4		5520-MC-424046	

CREATED WITH I-DEAS 8m4 | USER NAME: brandt

INCHES 0 1 2 3 4 5 6

METRIC 0 10 20 30 40 50 60 70 80 90 100 110 120 130 140 150