REV.	DESCRIPTION	DRAWN	DATE
		APPD.	DATE
---	NEW RELEASE - ER #7554	JSB	9/15/03

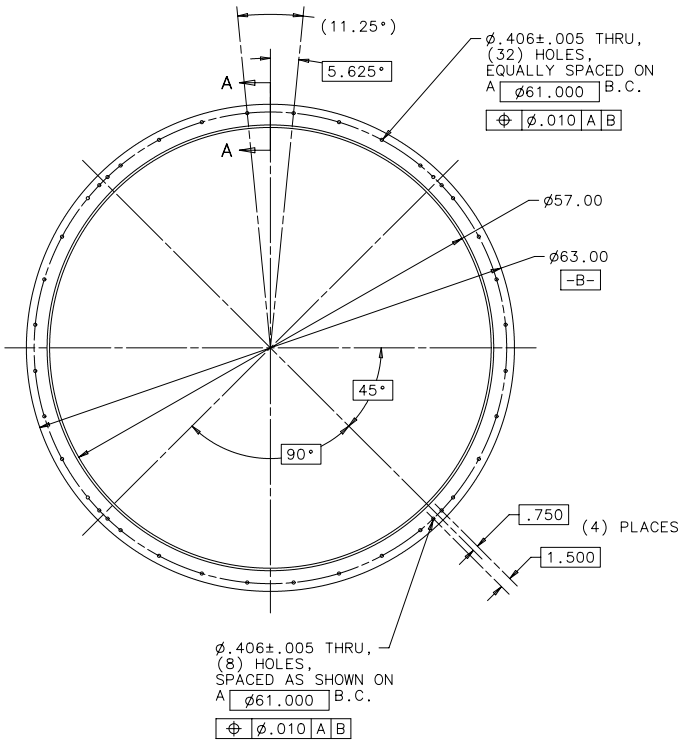

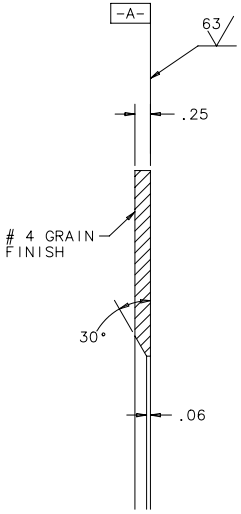

SECTION A-A

SCALE 1:1

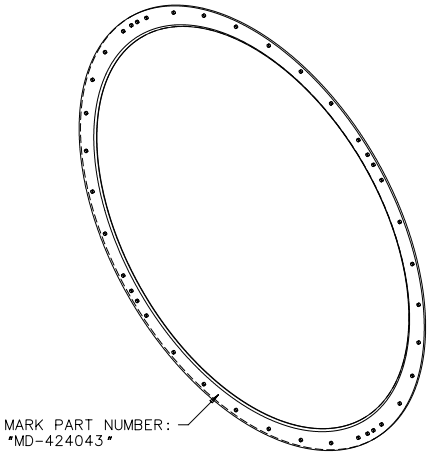

NOTES:
1) MATERIAL SHALL BE 304 STAINLESS STEEL AND MEET ASTM MATERIAL SPECIFICATION SA-240.

2) 125 uin MAXIMUM SURFACE FINISH ON ALL UN-MACHINED SURFACES NOT NOTED.

3) PARTS SHALL BE CLEANED AND DEGREASED AFTER MACHINING PER FERMILAB APPROVED PROCEDURE.

ITEM	PART NO.	DESCRIPTION OR SIZE	QTY.

PARTS LIST

UNLESS OTHERWISE SPECIFIED			ORIGINATOR	G.APOLLINARI	
.XX	.XXX	ANGLES	DRAWN	G.ZIELBAUER	9/15/03
± .03	±.010	± 2°	CHECKED	J.BRANDT	9/15/03
1. BREAK ALL SHARP EDGES .02 MAX.			APPROVED		
2. DO NOT SCALE DRAWING.			USED ON	5520-ME-424036	
3. DIMENSIONS BASED UPON ANSI Y14.5M-1982					
4. MAX. ALL MACH. SURFACES 63 √			MATERIAL	SEE NOTE	

FERMI NATIONAL ACCELERATOR LABORATORY
UNITED STATES DEPARTMENT OF ENERGY

CKM VACUUM VETO SYSTEM
SMALL FINAL ASSEMBLY
SMALL MID-THROUGH RING

SCALE	FILMED	DRAWING NUMBER	REV.
1:8		5520-MD-424043	

CREATED WITH I-DEAS 8m4 | USER NAME: brandt

INCHES 0 1 2 3 4 5 6
METRIC 0 10 20 30 40 50 60 70 80 90 100 110 120 130 140 150