REVISION HISTORY CAD MAINTAINED. CHANGES SHALL BE INCORPORATED BY THE DESIGN ACTIVITY.				
ZONE	REV	DESCRIPTION	DATE	APPROVED
	A	INITIAL RELEASE: ER# ILC-000052		

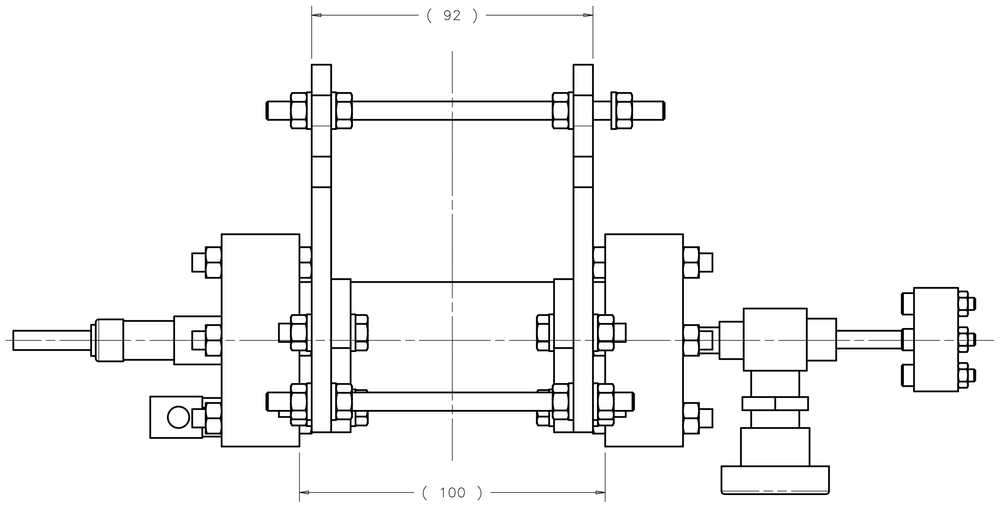

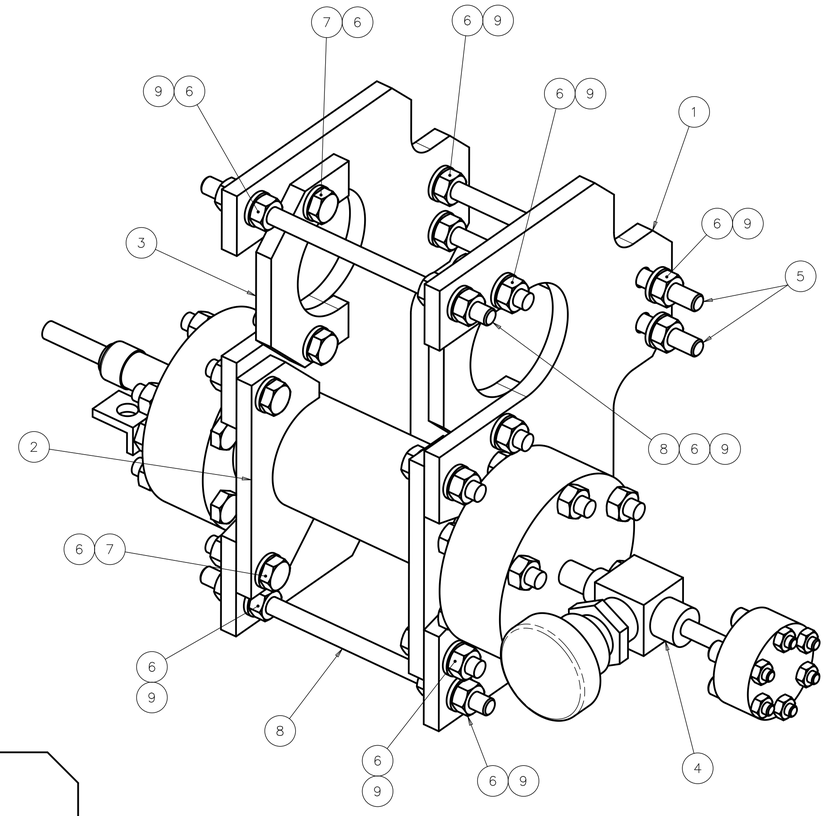

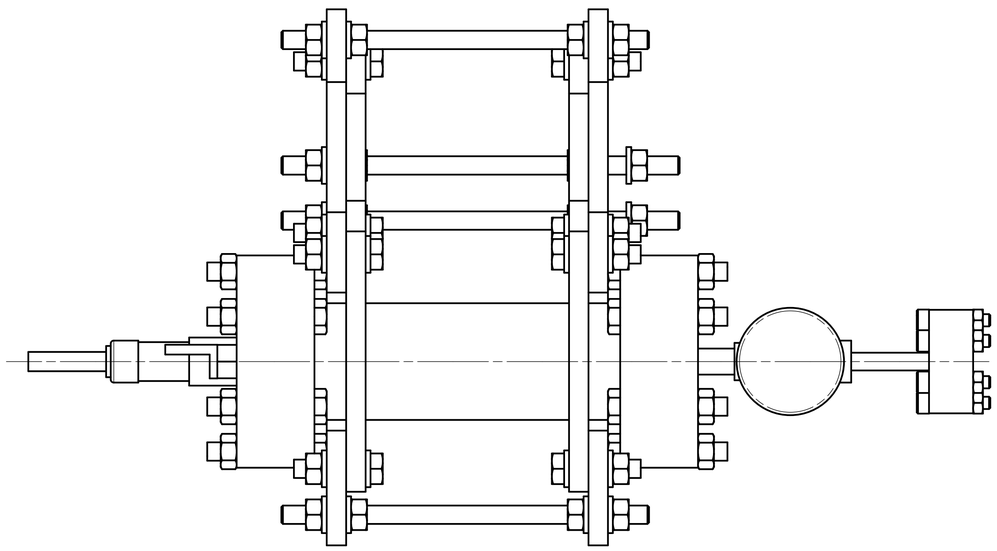

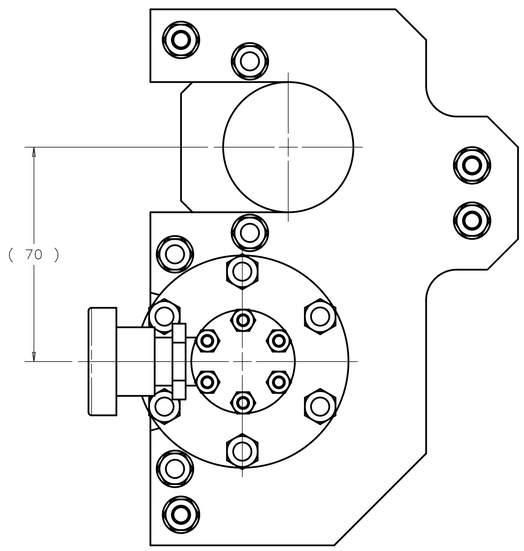

ITEM	P.I.N.	DESCRIPTION	QTY
9	COM'L	M6 HEX NUT, 316 S.S.	24
8	COM'L	THREADED ROD, M6 X 120 LG, 316 S.S.	2
7	COM'L	SCREW-HH, M6 X 25 LG, 316 S.S.	8
6	COM'L	M6 WASHER, 316 S.S.	32
5	COM'L	THREADED ROD, M6 X 130 LG, 316 S.S.	2
4	COM'L	CRYOGENIC MONITOR ASSY BRIDGEPORT INSTRUMENTS, DWG# 0000541	1
3	902905	LOCK PLATE-2	2
2	902895	LOCK PLATE-1	2
1	902885	SUPPORT PLATE	2

PARTS LIST

NOTES (UNLESS OTHERWISE SPECIFIED):

1. ASSEMBLY MUST BE FREE OF DIRT, GREASE, OIL AND CHIPS
2. ITEM 4 BEING SUPPLIED BY

NEXT ASSY	USED ON
-	-
APPLICATION	

FINISH: N/A

MATERIAL: SEE PARTS LIST

UNLESS OTHERWISE SPECIFIED:
DIMENSIONS ARE IN MILLIMETERS
INTERPRET DIM PER ASME Y14.5M-1994
BREAK ALL SHARP EDGES .75 MAX.
ALL MACH. SURFACES 3.2 MAX.

TOLERANCES: X ± 2, .X ± 0.8, .XX ± 0.13, ANGLE ± 1°

THIRD ANGLE PROJECTION

DRAWN BY V. MARTINEZ	DATE 22JAN10	
CHECKED BY C.GRIMM	DATE 29JAN10	
ENGINEERED BY Y.ORLOV	DATE 29JAN10	
DATABASE DESY EDMS	TEAM/GROUP	
CAD I-DEAS	SOLID MODEL NO. 813373	

FERMI NATIONAL ACCELERATOR LABORATORY
UNITED STATES DEPARTMENT OF ENERGY
P.O. BOX 500, BATAVIA, IL 60510-0500

TITLE
CRYOMODULE
COLDMASS
CRYOGENIC_MONITOR_W_SPRT_ASSY

SIZE	CAGE CODE	DWG NO.	REV
A1	0U5R6	D00000000902925	A

SCALE 1:1 | DO NOT SCALE DRAWING | SHEET 1 OF 1

Created: 14:02:58 on 29-01-10 (D-M-Y) By: victormm State: 1-INITIAL