REVISION HISTORY CAD MAINTAINED. CHANGES SHALL BE INCORPORATED BY THE DESIGN ACTIVITY.				
ZONE	REV	DESCRIPTION	DATE	APPROVED
	A	INITIAL RELEASE: ILC-000044		

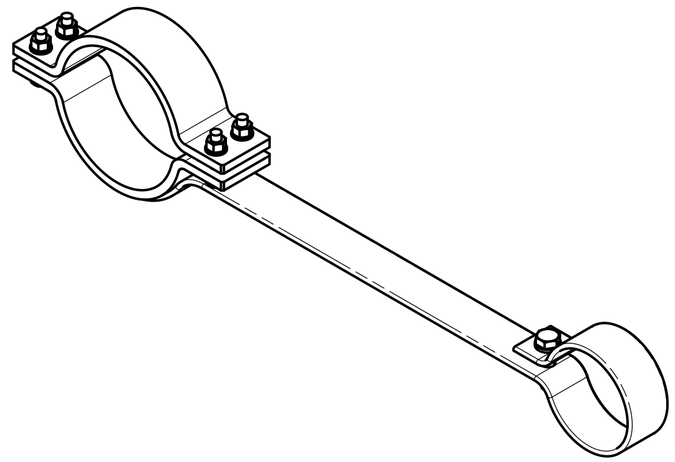

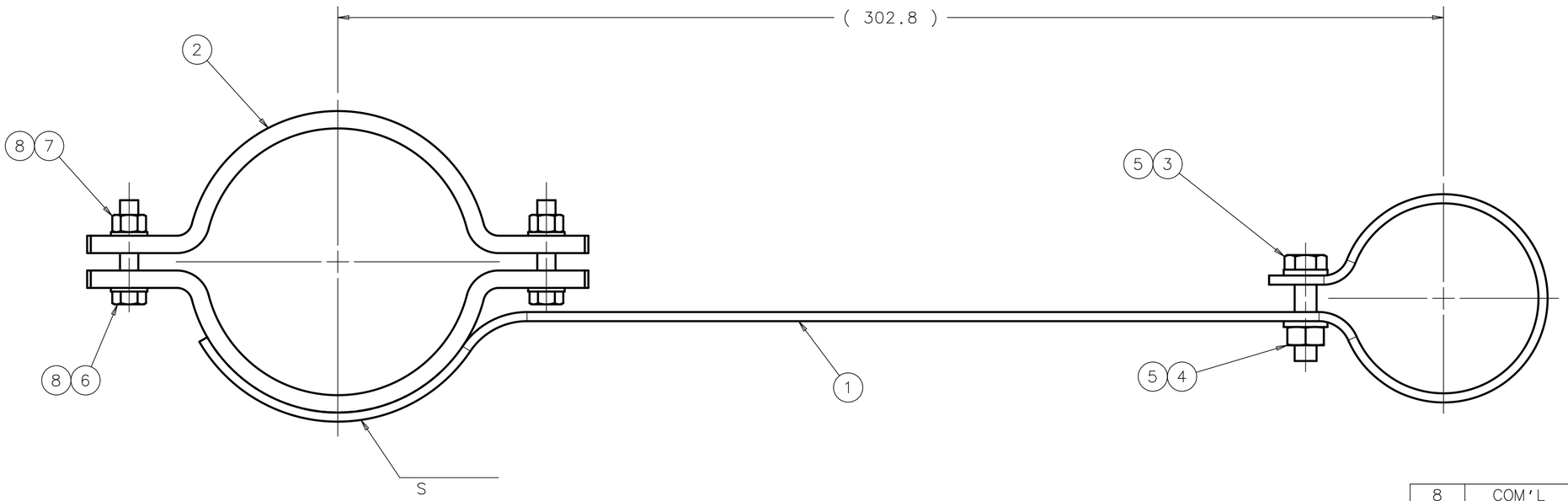

ITEM	P.I.N.	DESCRIPTION	QTY
8	COM'L	WASHER-PLAIN M5, 316 S.S. McMASTER P/N: 90965A160	8
7	COM'L	NUT-HEX M5, 316 S.S. McMASTER P/N: 94150A340	4
6	COM'L	SCREW-HEX HEAD M5 X 25 LG, 316 S.S. McMASTER P/N: 93635A172	4
5	COM'L	WASHER-PLAIN M6, 316 S.S. McMASTER P/N: 90965A170	2
4	COM'L	NUT-HEX M6, 316 S.S. McMASTER P/N: 94150A345	1
3	COM'L	SCREW-HEX HEAD M6 X 25 LG, 316 S.S. McMASTER P/N: 93635A214	1
2	898185	CLAMP HEAT SINK	2
1	898125	BRAID TUNER-MOTOR	1

PARTS LIST

NOTES (UNLESS OTHERWISE SPECIFIED):

1. ASSEMBLY MUST BE FREE OF DIRT, GREASE, OIL AND CHIPS.

-	-
NEXT ASSY	USED ON
APPLICATION	

FINISH: N/A

MATERIAL: SEE PARTS LIST

UNLESS OTHERWISE SPECIFIED:
DIMENSIONS ARE IN MILLIMETERS
INTERPRET DIM PER ASME Y14.5M-1994
BREAK ALL SHARP EDGES .75 MAX.
ALL MACH. SURFACES 3.2 / MAX.

TOLERANCES: X ± 2, .X ± 0.8, .XX ± 0.13, ANGLE ± 1°

THIRD ANGLE PROJECTION

DRAWN BY V. MARTINEZ	DATE 25NOV09		
CHECKED BY C.GRIMM	DATE 25JAN10		
ENGINEERED BY Y.ORLOV	DATE 26JAN10		
DATABASE DESY EDMS	TEAM/GROUP		
CAD I-DEAS	SOLID MODEL NO. D00000000812733		

FERMI NATIONAL ACCELERATOR LABORATORY
UNITED STATES DEPARTMENT OF ENERGY
P.O. BOX 500, BATAVIA, IL 60510-0500

TITLE: 1.3 GHz CRYOMODULE COOLING STRAPS BRAID_TUNER-MOTOR_ASSY

SIZE	CAGE CODE	DWG NO.	REV
A2	0U5R6	D00000000899145	A

SCALE 1:1 | DO NOT SCALE DWG | SHEET 1 OF 1