NOTES (UNLESS OTHERWISE SPECIFIED):

1. ASSEMBLY MUST BE FREE OF DIRT, GREASE, OIL AND CHIPS.
2. EST. WT.= 12.3 Kg [27 LBS.].
3. ITEM 18 NOT SHOWN ON TUNER ASSY DWG. ITEM 18 IS PART OF TUNER ASSY HARDWARE KIT.

REVISION HISTORY

CAD MAINTAINED. CHANGES SHALL BE INCORPORATED BY THE DESIGN ACTIVITY.

ZONE	REV	DESCRIPTION	DATE	APPROVED
	A	INITIAL RELEASE ER# ILC-000028		
B3	B	ECO# ILC-000084 UPDATE BOM	08MAR10	S. BARBANOTTI
C3 H12	C	ER# ILC-000132, DWG SCALE WAS .35:1 ADDED ITEMS 16, 17 & 18 DELETED ITEMS 4,5,7 & 13 ADDED NOTES 2 & 3	17NOV10	S. BARBANOTTI

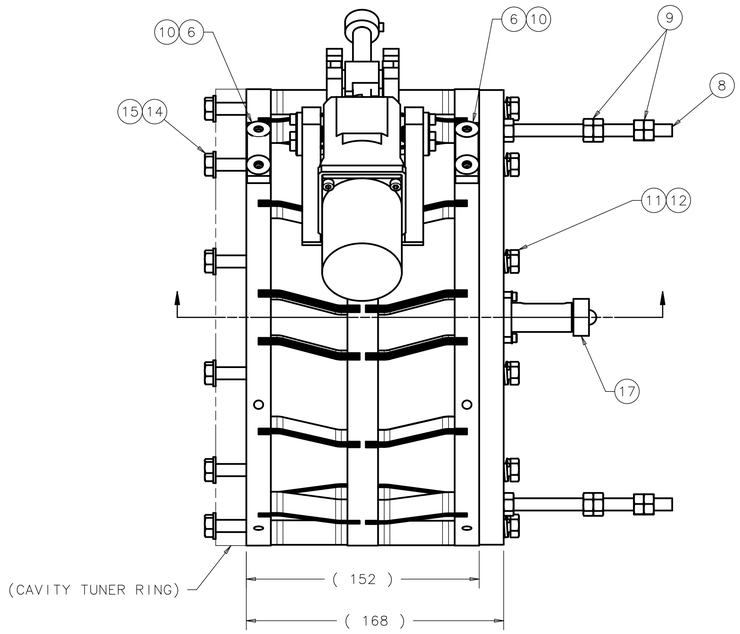

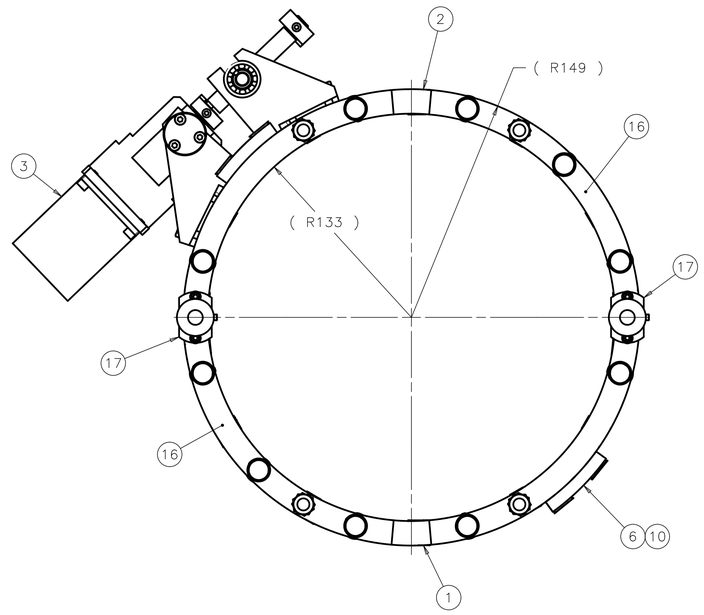

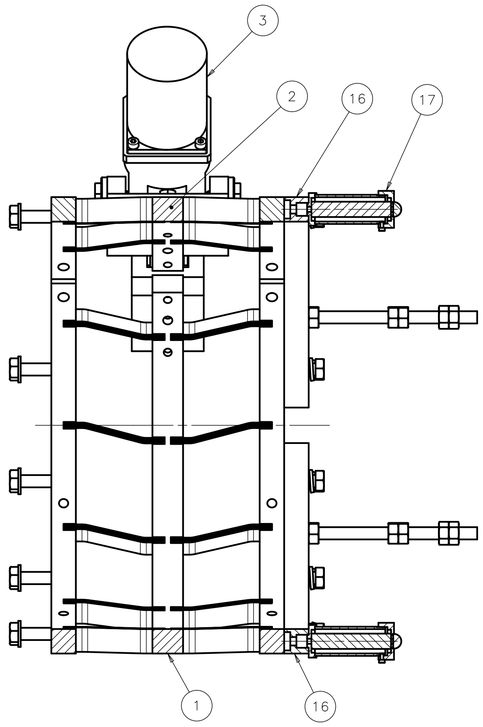

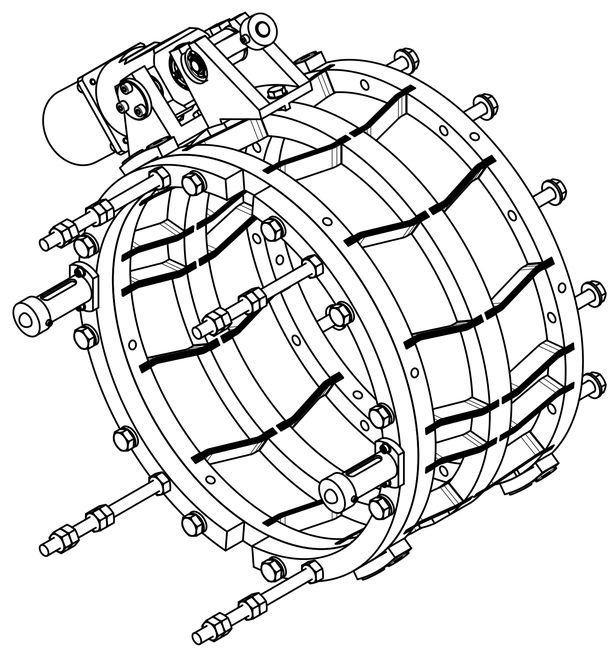

	ITEM	P.I.N.	DESCRIPTION	QTY
NOTE 3	18	COML	SCREW-SH M8 X 1.25 X 35LG, 18-8 S.S. MCMASTER 92605A153 OR EQUIV.	2
	17		FNAL-DW# MB-443662 PIEZO ENCLOSURE ASSEMBLY	2
	16	886085	REINFORCING-RING	2
	15	COML	WASHER FLAT M8 304SS MCM 90965A190 OR EQUIV.	10
	14	COML	SCREW-HEX M8X1.25X25 316SS MCMASTER 93635A322 OR EQUIV.	10
	~~13~~	~~886415~~	~~SCREW-HEX, MODIFIED M8X55 316SS~~	~~2~~
	12	COML	SCREW-HEX M8X1.25X30 316SS MCMASTER 93635A326 OR EQUIV.	10
	11	COML	WASHER-SPRING M8 304SS MCMASTER92153A429 OR EQUIV.	10
	10	COML	SCR FLTHD SHC M8X1.25X25 316SS MCMASTER 93395A407 OR EQUIV.	8
	9	COML	NUT-HEX M8X1.25 316SS MCMASTER 94150A355 OR EQUIV.	22
	8	COML	ROD THREADED M8X1.25X120 316SS MCM 94185A160 OR EQUIV.	4
	~~7~~	~~COML~~	~~PIEZO 10X10X40~~	~~2~~
	6	885375	RING CONNECTOR	4
	~~5~~	~~866395~~	~~PIEZO-SUPPORT RING SIDE ASSY~~	~~2~~
	~~4~~	~~886065~~	~~PIEZO SUPPORT, TUNER SIDE~~	~~2~~
	3	890645	MOTOR HD	1
	2	886415	RING W/BLADE-SUPPORT, TOP	1
	1	886405	RING W/BLADE-SUPPORT, BOTTOM	1

PARTS LIST

-	872825
NEXT ASSY	USED ON
APPLICATION	

FINISH: N/A

MATERIAL: SEE PARTS LIST

UNLESS OTHERWISE SPECIFIED:
DIMENSIONS ARE IN MILLIMETERS
INTERPRET DIM PER ASME Y14.5M-1994
BREAK ALL SHARP EDGES .75 MAX.
ALL MACH. SURFACES 3.2 MAX.

TOLERANCES: X ± 2, .X ± 1, .XX ± 0.13, ANGLE ± .5°

THIRD ANGLE PROJECTION

DRAWN BY J. KURNAT	DATE 12AUG09	
CHECKED BY C. GRIMM	DATE 8SEP09	
ENGINEERED BY S. BARBANOTTI	DATE 8SEP09	
DATABASE DESY EDMS	TEAM/GROUP T4CM	
CAD I-DEAS	SOLID MODEL NO. D00000000774853	

FERMI NATIONAL ACCELERATOR LABORATORY
UNITED STATES DEPARTMENT OF ENERGY
P.O. BOX 500, BATAVIA, IL 60510-0500

TITLE
ILC TYPE IV CRYOMODULE PIEZO SLIM TUNER-INFN ASSY-PIEZO_SLIM_TUNER_INFN

SIZE	CAGE CODE	DWG NO.	REV
A1	0U5R6	D00000000886555	C

SCALE 1:2 | DO NOT SCALE DRAWING | SHEET 1 OF 1

THIS DESIGN IS THE INTELLECTUAL PROPERTY OF INFN ACCORDING TO ISO 16016. THIS DRAWING HAS BEEN REDRAWN WITH INFN'S PERMISSION FOR FABRICATION PURPOSES WITHIN THE USA AND IS TO BE USED SOLELY WITHIN FERMILAB. USAGE OUTSIDE OF FERMILAB MUST BE APPROVED BY INFN, MILAN.