REVISION HISTORY CAD MAINTAINED. CHANGES SHALL BE INCORPORATED BY THE DESIGN ACTIVITY.				
ZONE	REV	DESCRIPTION	DATE	APPROVED
	A	INITIAL RELEASE ER # ILC-000011	06FEB09	

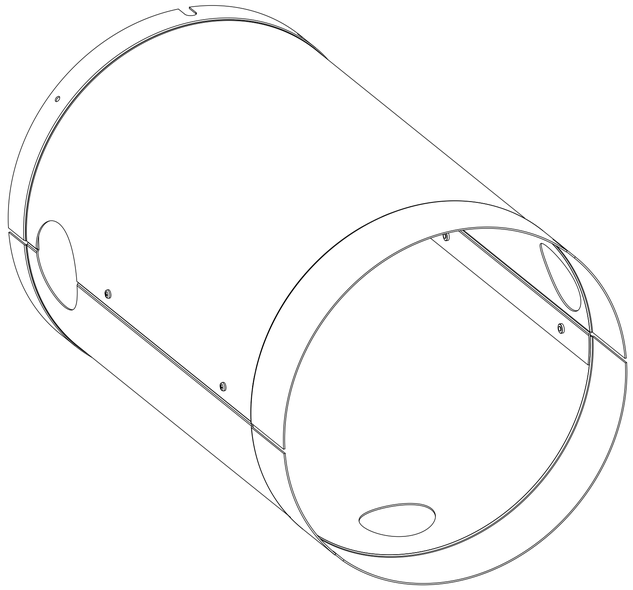

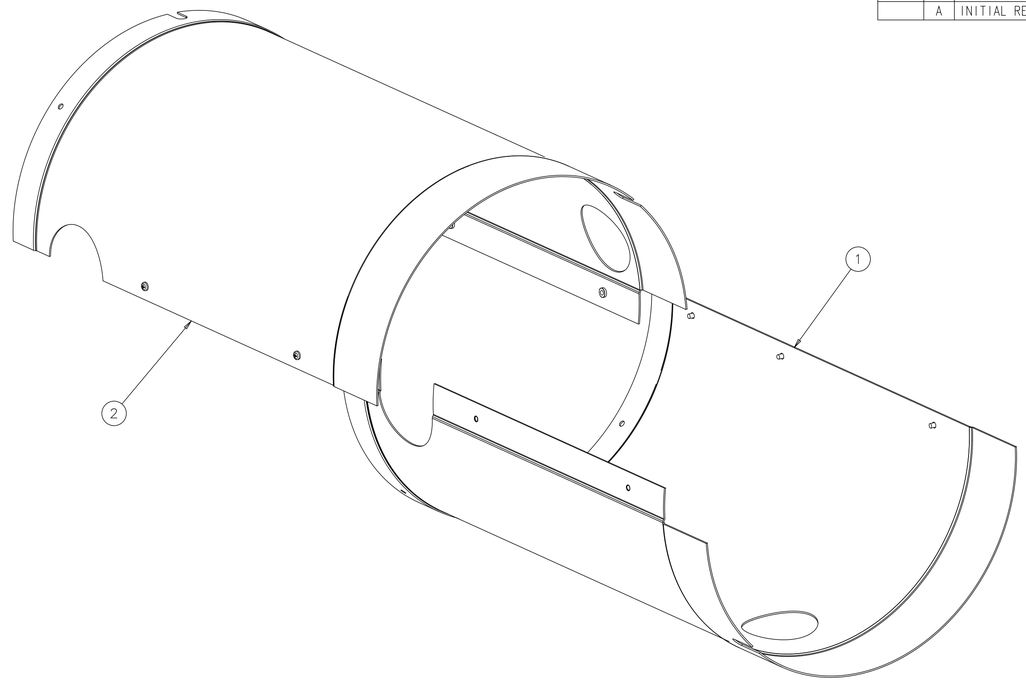

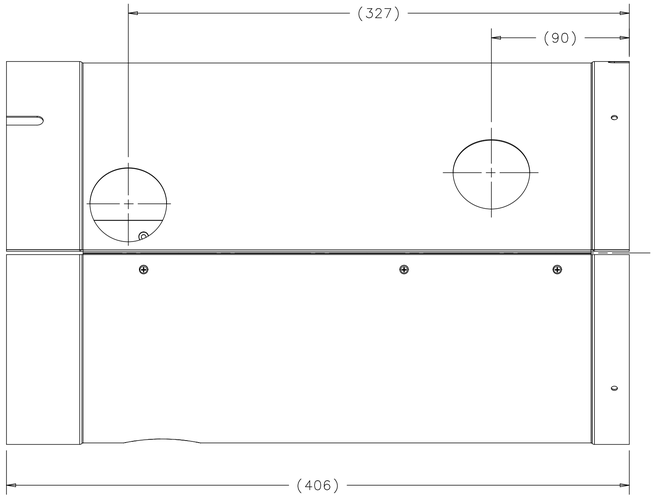

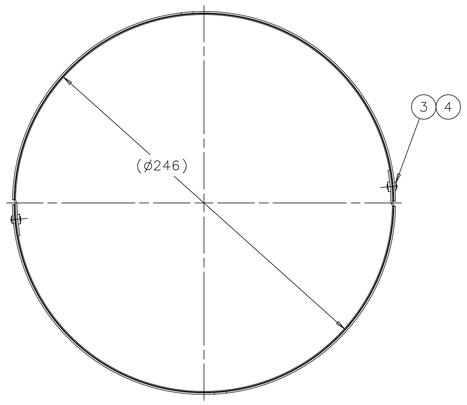

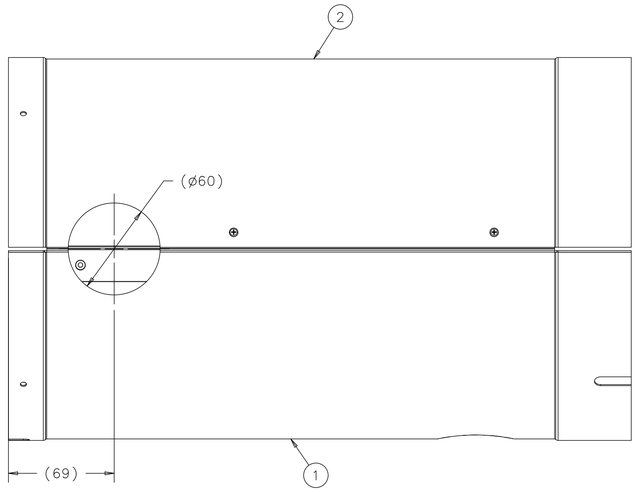

ITEM	P.I.N.	DESCRIPTION	QTY
4	COM'L	PAN HEAD MACHINE SCREW M3, 4MM-LG 316 SS McMASTER-CARR #90116A147	5
3	COM'L	CLINCH CAPTIVE NUT M3 18-8 SS, McMASTER-CARR # 97648A410	5
2	866985	INTERCONNECT MAG SHIELD 2A	1
1	866975	INTERCONNECT MAG SHIELD 1A	1

PARTS LIST

NOTES (UNLESS OTHERWISE SPECIFIED):

1. VENDER SHALL FOLLOW FERMILAB ENGINEERING SPECIFICATION 5500-ES-371041 WHEN COSTING, FABRICATING, PACKING, AND SHIPPING ALL SHIELD PARTS AND SHIELD ASSEMBLIES.

NEXT ASSY	USED ON
-	867255

APPLICATION

FINISH: NOTE 1

MATERIAL: SEE PART LIST

UNLESS OTHERWISE SPECIFIED:
DIMENSIONS ARE IN MILLIMETERS
INTERPRET DIM PER ASME Y14.5M-1994
BREAK ALL SHARP EDGES .75 MAX.
ALL MACH. SURFACES 3.2 MAX.

TOLERANCES: X ± - ; .X ± 0.8 ; .XX ± - ; ANGLE ± -

THIRD ANGLE PROJECTION

DRAWN BY Y. ORLOV	DATE 05FEB09	
CHECKED BY C. GRIMM	DATE 17MAR09	
ENGINEERED BY Y. ORLOV	DATE 17MAR09	
DATABASE DESY EDMS	TEAM/GROUP T4CM CRYOMODULE	
CAD I-DEAS	SOLID MODEL NO. N/A	

FERMI NATIONAL ACCELERATOR LABORATORY
UNITED STATES DEPARTMENT OF ENERGY
P.O. BOX 500, BATAVIA, IL 60510-0500

TITLE
ILC-CRYOMODULE-TYPE IV HELIUM VESSEL INTERCONNECT_MAG_SHIELD_ASSY

SIZE	CAGE CODE	DWG NO.	REV
A1	0U5R6	D00000000866745	A

SCALE 1:2 | DO NOT SCALE DRAWING | SHEET 1 OF 1

Created: 09:09:20 on 17-03-09 (D-M-Y) By: orlov State: 1-INITIAL