NOTES:

1. VENDOR OPTION TO FABRICATE AS SINGLE ASSEMBLY AND CUT INTO HALVES AS SHOWN IN FULL ASSY VIEW OR FABRICATE PER DRAWINGS 732931 AND 732941.

REVISION HISTORY CAD MAINTAINED. CHANGES SHALL BE INCORPORATED BY THE DESIGN ACTIVITY.				
ZONE	REV	DESCRIPTION	DATE	APPROVED
	A	INITIAL RELEASE		

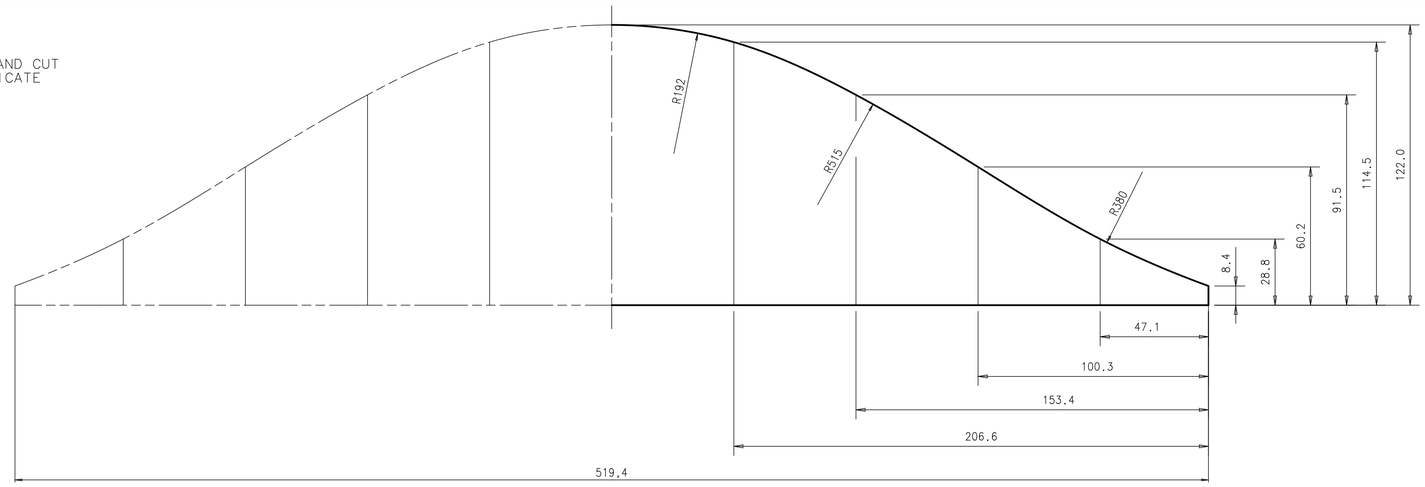

FLAT PATTERN

SCALE 3/4

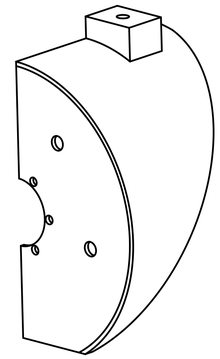

ISOMETRIC VIEW

SCALE 1/2

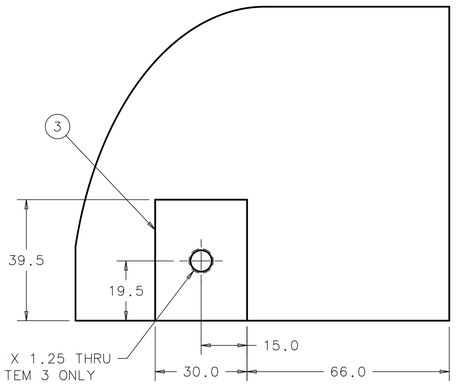

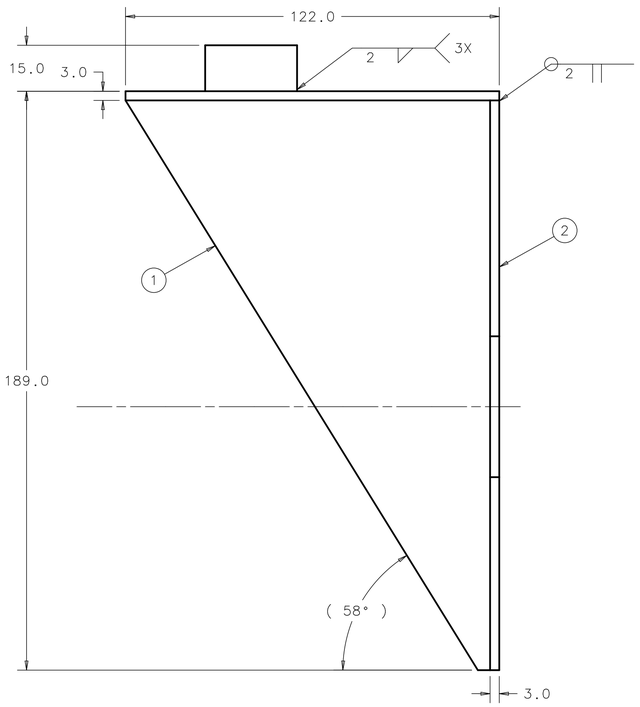

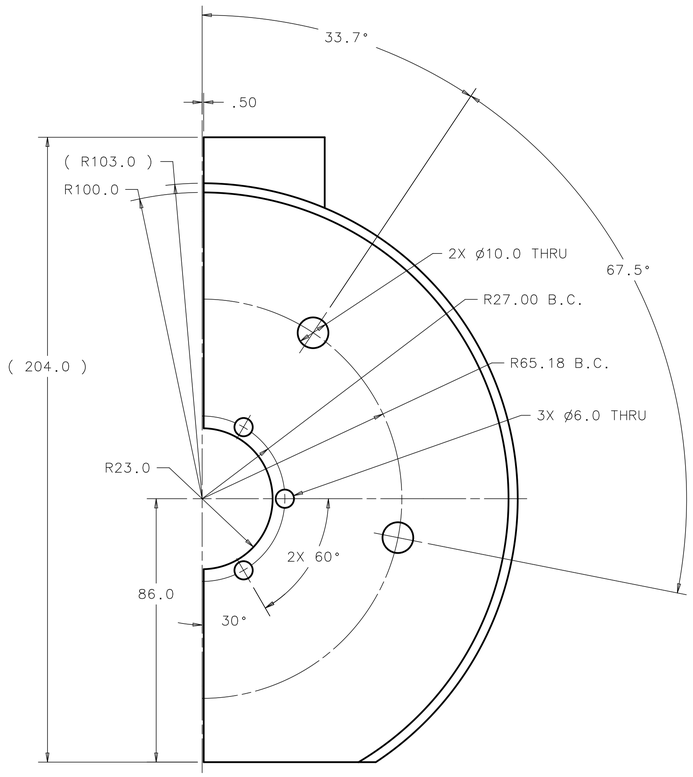

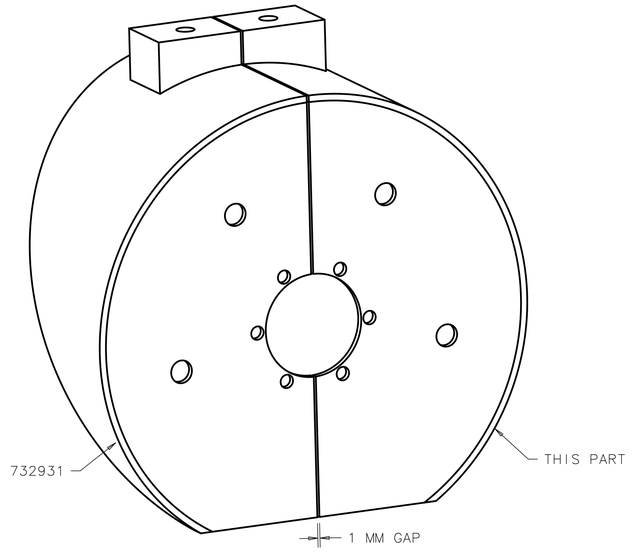

FULL ASSY VIEW

SCALE 3/4

ITEM	P.I.N.	DESCRIPTION	QTY
3		CABLE MOUNT A 6061-T6 ALUMINUM	1
2		PLATE BACK A 6061-T6 ALUMINUM	1
1		SHIELD SHELL A 6061-T6 ALUMINUM	1

PARTS LIST

FINISH: N/A	UNLESS OTHERWISE SPECIFIED: DIMENSIONS ARE IN MILLIMETERS INTERPRET DIM PER ASME Y14.5M-1994 BREAK ALL SHARP EDGES .75 MAX. ALL MACH. SURFACES 3.2 MAX.	DRAWN BY: V. MARTINEZ — DATE: 21AUG06 CHECKED BY: C. GRIMM — DATE: 28SEP06 ENGINEERED BY: D. MITCHELL — DATE: 28SEP06	FERMI NATIONAL ACCELERATOR LABORATORY UNITED STATES DEPARTMENT OF ENERGY P.O. BOX 500, BATAVIA, IL 60510-0500
MATERIAL: N/A	TOLERANCES: X ± 2, .X ± 0.8, .XX ± 0.13, ANGLE ± 1° THIRD ANGLE PROJECTION	DATABASE: DESY EDMS — TEAM/GROUP: CAD: I-DEAS — SOLID MODEL NO.: D00000000557333	TITLE: ILC-SRF CRYOMODULE HEAT-SHIELD_MC_A
			SIZE: A1 — CAGE CODE: 0U5R6 — DWG NO.: D00000000732941 — REV: A
			SCALE 1:1 — DO NOT SCALE DRAWING — SHEET 1 OF 1