NOTES:

1. VENDOR OPTION TO FABRICATE AS SINGLE ASSEMBLY AND CUT INTO HALVES AS SHOWN IN FULL ASSY VIEW OR FABRICATE PER DRAWING 732931 AND 732941.

REVISION HISTORY

CAD MAINTAINED. CHANGES SHALL BE INCORPORATED BY THE DESIGN ACTIVITY.

ZONE	REV	DESCRIPTION	DATE	APPROVED
	A	INITIAL RELEASE		

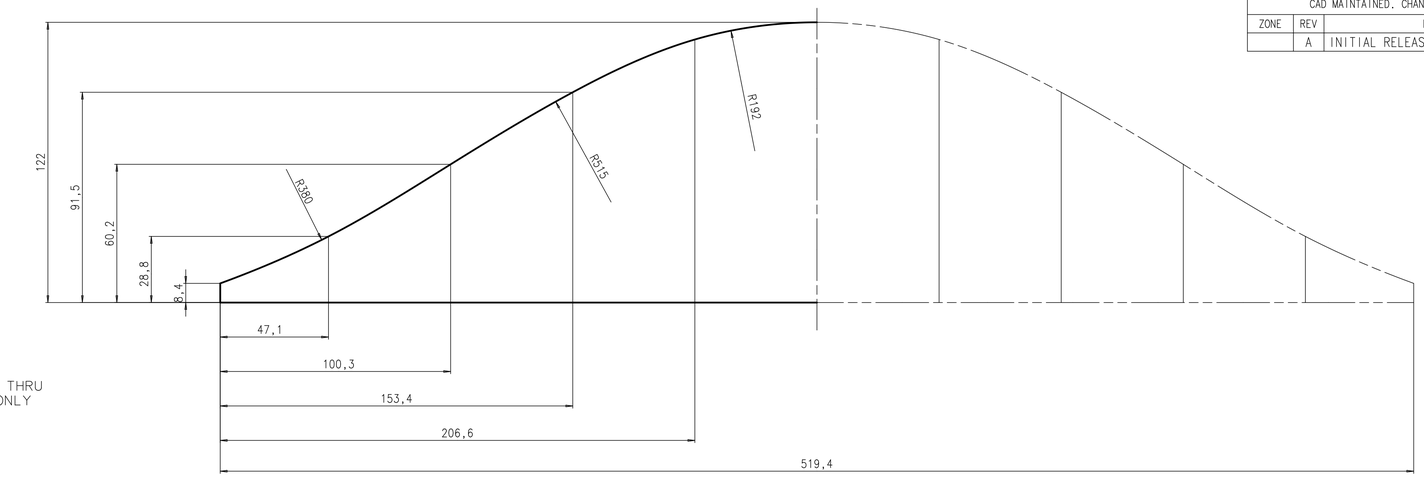

FLAT PATTERN

SCALE 3/4

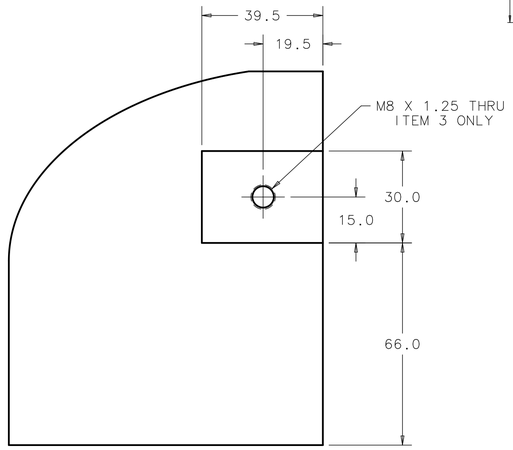

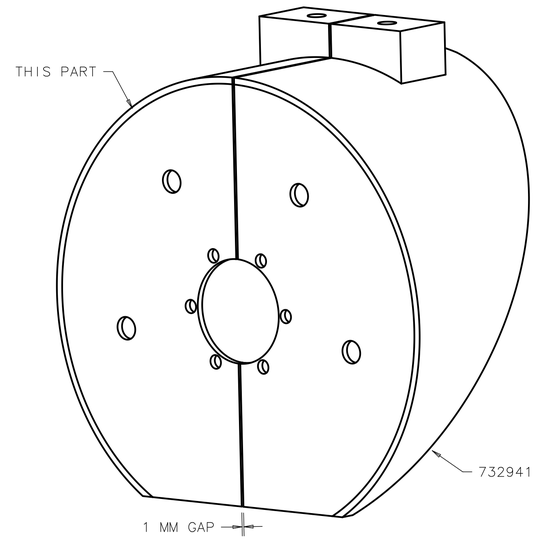

FULL ASSY VIEW

SCALE 3/4

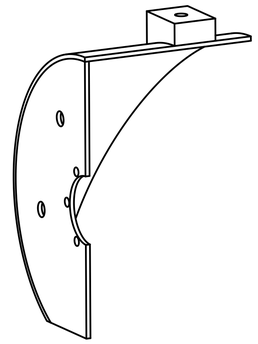

ISOMETRIC VIEW

SCALE 1/2

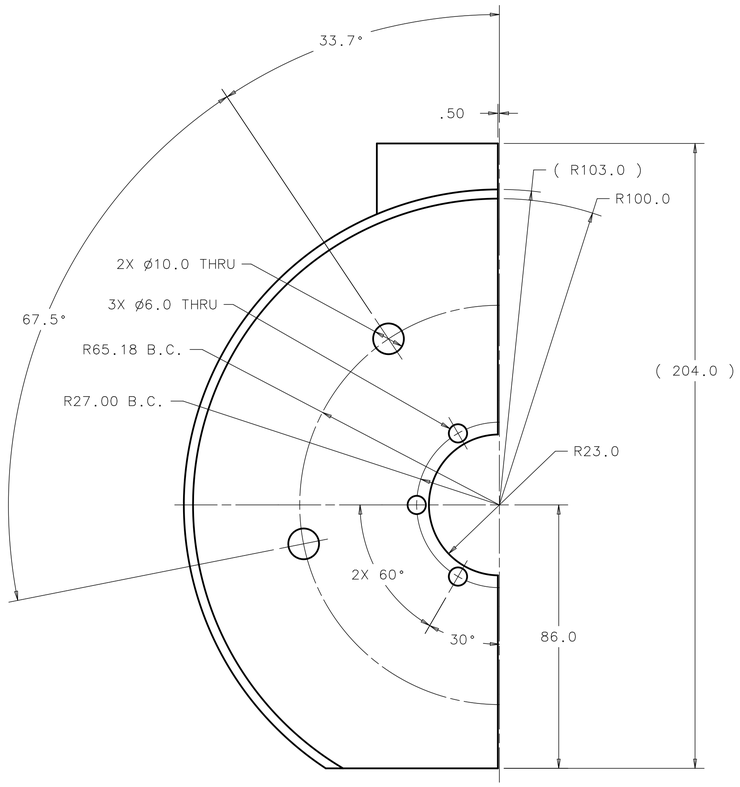

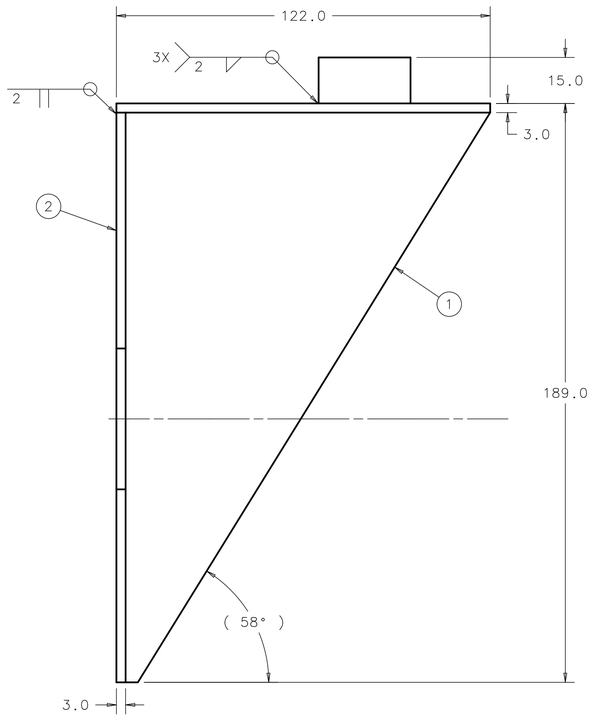

ITEM	P.I.N.	DESCRIPTION	QTY
3		CABLE MOUNT B 6061-T6 ALUMINUM	1
2		PLATE BACK B 6061-T6 ALUMINUM	1
1		SHIELD SHELL B 6061-T6 ALUMINUM	1

PARTS LIST

FINISH: N/A

MATERIAL: N/A

UNLESS OTHERWISE SPECIFIED:

DIMENSIONS ARE IN MILLIMETERS
INTERPRET DIM PER ASME Y14.5M-1994
BREAK ALL SHARP EDGES .75 MAX.
ALL MACH. SURFACES 3.2 MAX.

TOLERANCES: X ± 2, .X ± 0.8, .XX ± 0.13, ANGLE ± 1°

THIRD ANGLE PROJECTION

DRAWN BY V. MARTINEZ	DATE 21AUG06	
CHECKED BY C. GRIMM	DATE 28SEP06	
ENGINEERED BY D. MITCHELL	DATE 28SEP06	
DATABASE DESY EDMS	TEAM/GROUP	
CAD I-DEAS	SOLID MODEL NO. D00000000557343	

FERMI NATIONAL ACCELERATOR LABORATORY
UNITED STATES DEPARTMENT OF ENERGY
P.O. BOX 500, BATAVIA, IL 60510-0500

TITLE

ILC - SRF CRYOMODULE HEAT-SHIELD_MC_B

SIZE	CAGE CODE	DWG NO.	REV
A1	0U5R6	D00000000732931	A

SCALE 1:1 | DO NOT SCALE DRAWING | SHEET 1 OF 1

Created: 13:55:24 on 09-06-09 (D-M-Y) By: orlov State: 1-INITIAL