REVISION HISTORY CAD MAINTAINED. CHANGES SHALL BE INCORPORATED BY THE DESIGN ACTIVITY.				
ZONE	REV	DESCRIPTION	DATE	APPROVED
	A	INITIAL RELEASE		

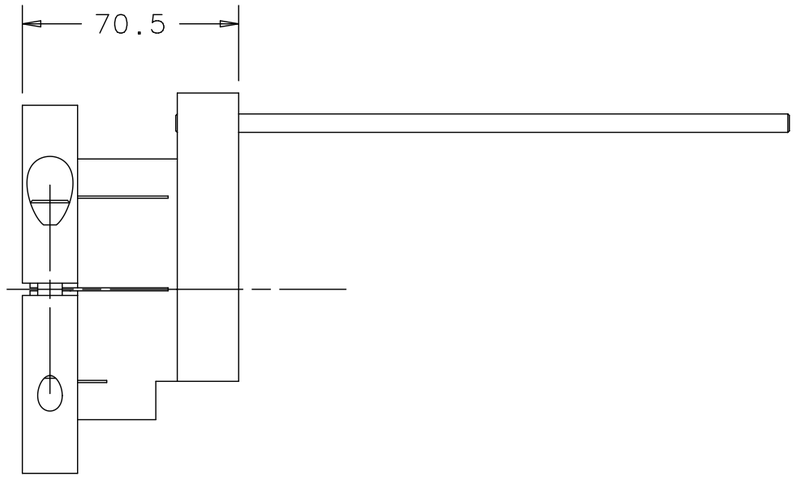

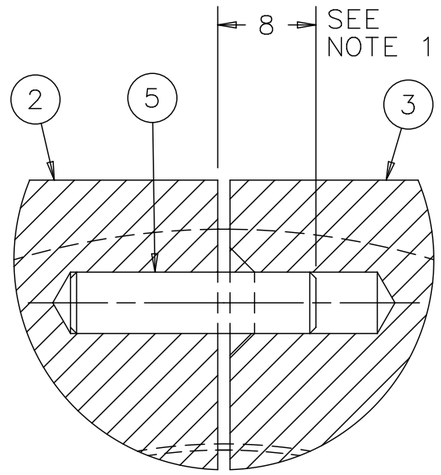

VIEW A
SCALE 2/1

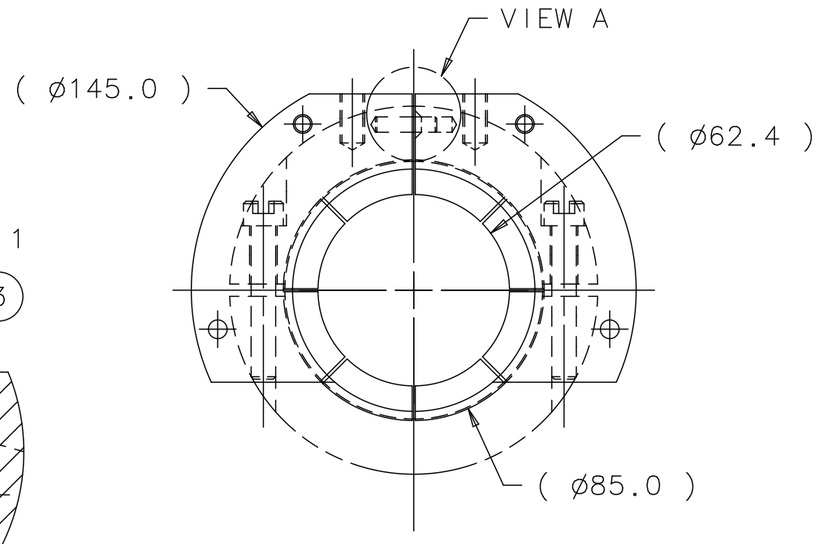

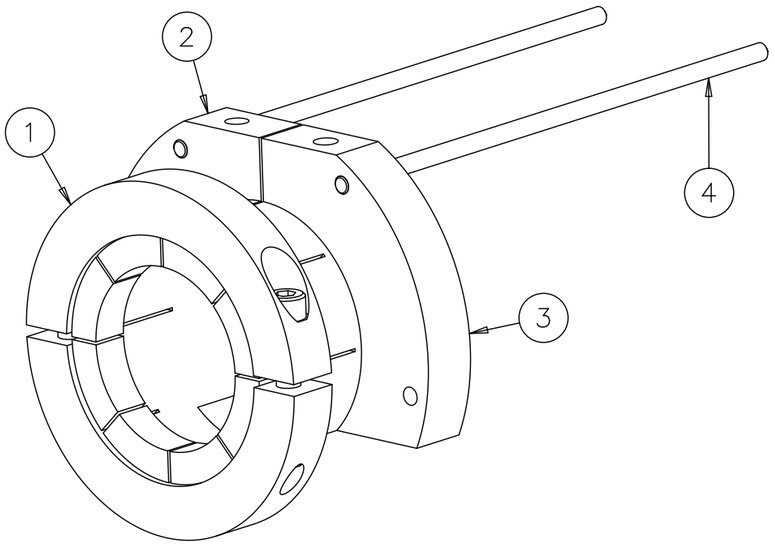

ISOMETRIC VIEW

ITEM	P.I.N.	DESCRIPTION	QTY
5	COM'L	ø5 X 20MM LONG-DOWEL PIN STAINLESS STEEL	1
4	COM'L	M6 X 200MM LONG-THREADED ROD STAINLESS STEEL	2
3	730091	FLANGE_EXTENSION_B	1
2	730081	FLANGE_EXTENSION_A	1
1	730101	INTERCEPT_4-5K_MC_CLAMP	1

PARTS LIST

NOTES:

1. ITEM # 5 (DOWEL PIN), IS PRESSED INTO ITEM # 2 (FLANGE EXTENSION A) TO HEIGHT SHOWN.

FINISH N/A	UNLESS OTHERWISE SPECIFIED: DIMENSIONS ARE IN MILLIMETERS INTERPRET DIM PER ASME Y14.5M-1994 BREAK ALL SHARP EDGES .75 MAX. ALL MACH. SURFACES 3.2 MAX.	DRAWN BY J.MONTELONGO	DATE 23AUG06
		CHECKED BY CHUCK GRIMM	DATE 28SEP06
		ENGINEERED BY DON MITCHELL	DATE 28SEP06
MATERIAL SEE PARTS LIST	TOLERANCES X ± 2 .X ± 0.8 .XX ± 0.13 ANGLE ± 1°	THIRD ANGLE PROJECTION	
		DATABASE DESY EDMS	TEAM/GROUP T4CM DESIGN
		CAD I-DEAS	SOLID MODEL NO. D00000000557303

FERMI NATIONAL ACCELERATOR LABORATORY
UNITED STATES DEPARTMENT OF ENERGY
P.O. BOX 500, BATAVIA, IL 60510-0500

TITLE
ILC-SRF CRYOMODULE
4.5K INTERCEPT
INTERCEPT_4-5K_MC

SIZE	CAGE CODE	DWG NO.	REV
A3	0U5R6	D00000000729431	A

SCALE 1:2 | DO NOT SCALE DWG | SHEET 1 OF 1

Created: 14:23:42 on 09-06-09 (D-M-Y) By: orlov State: 1-4INITIAL