X1 Spool

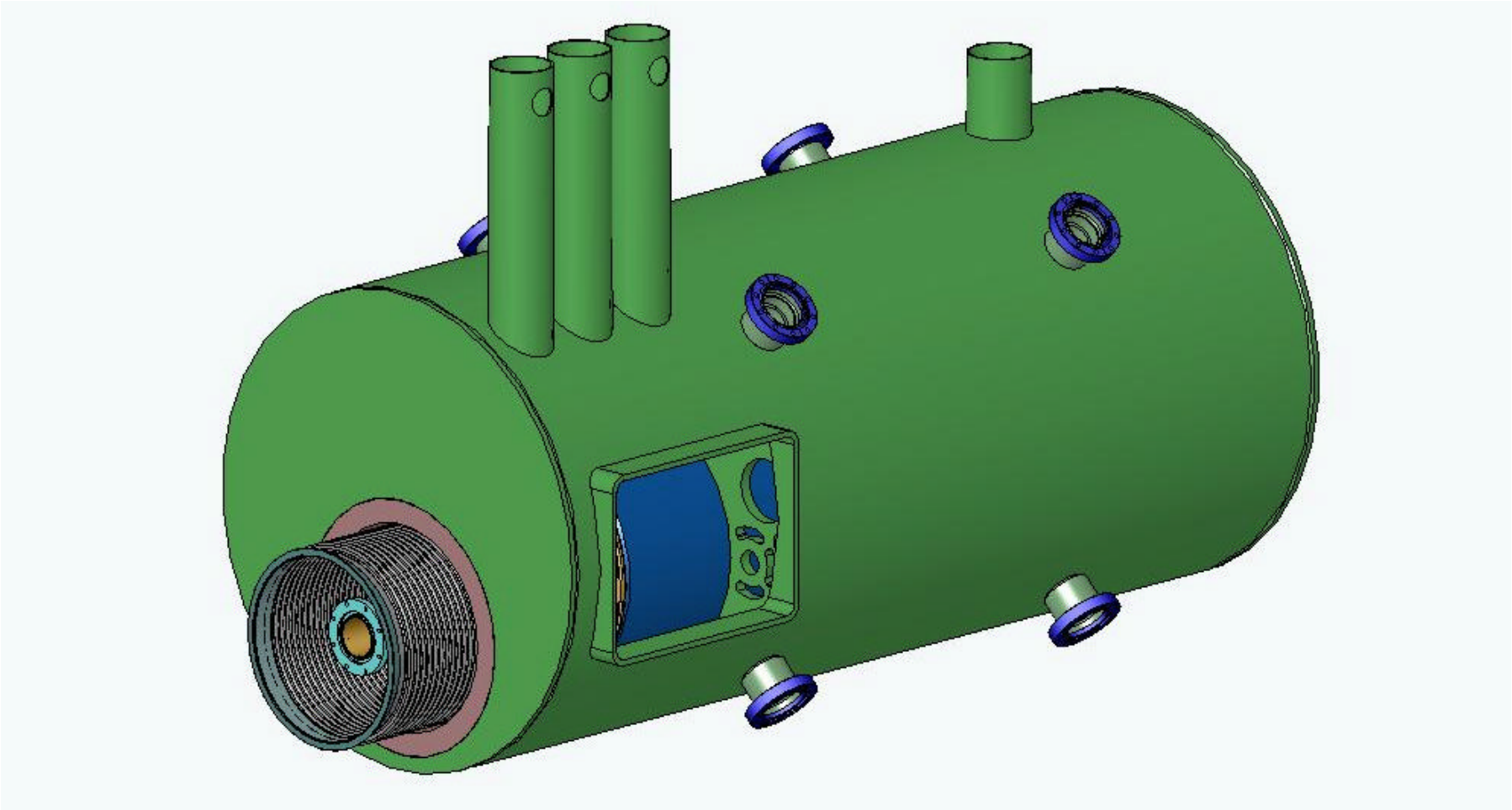

X1 Spool

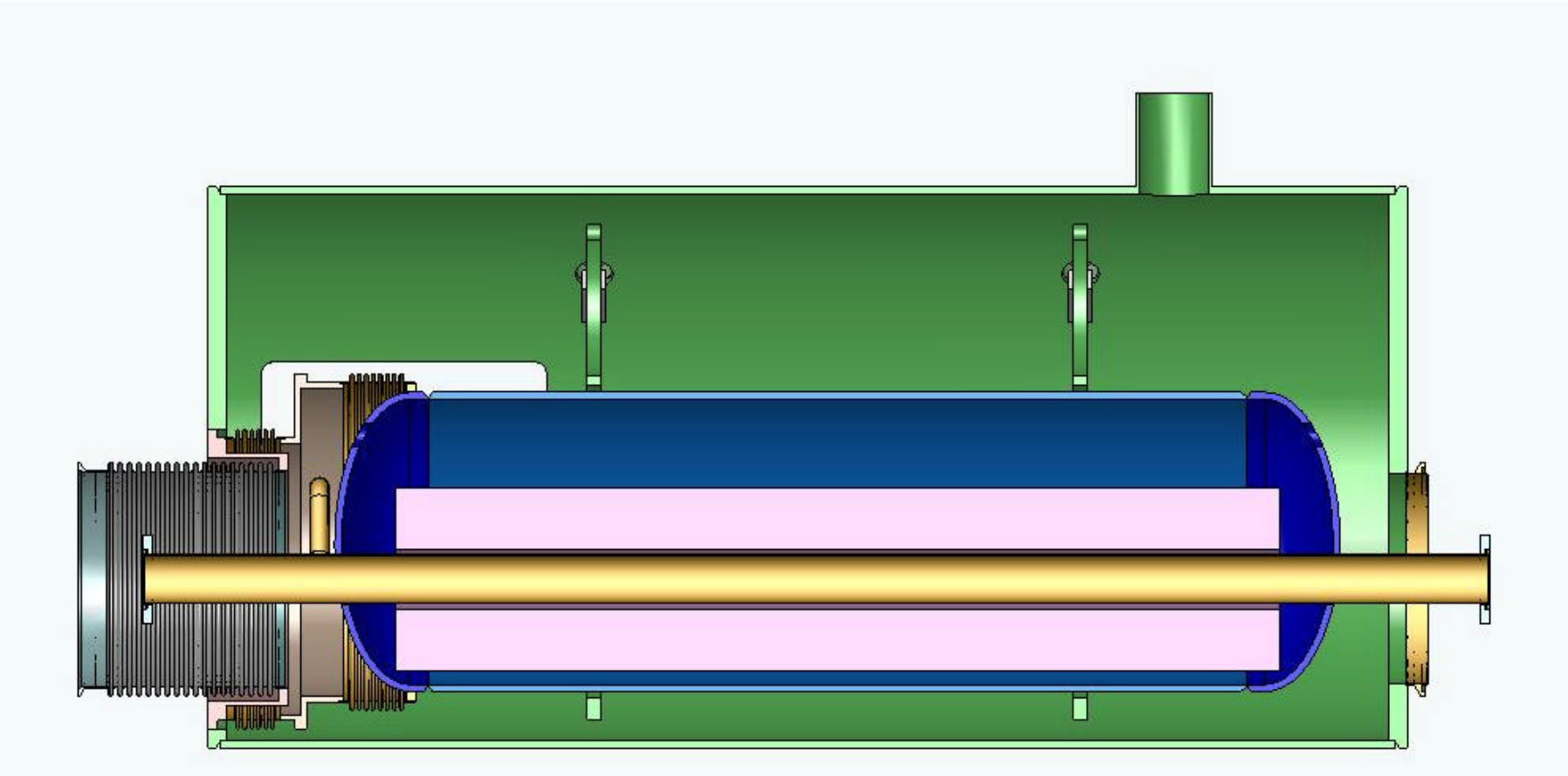

X2 Spool

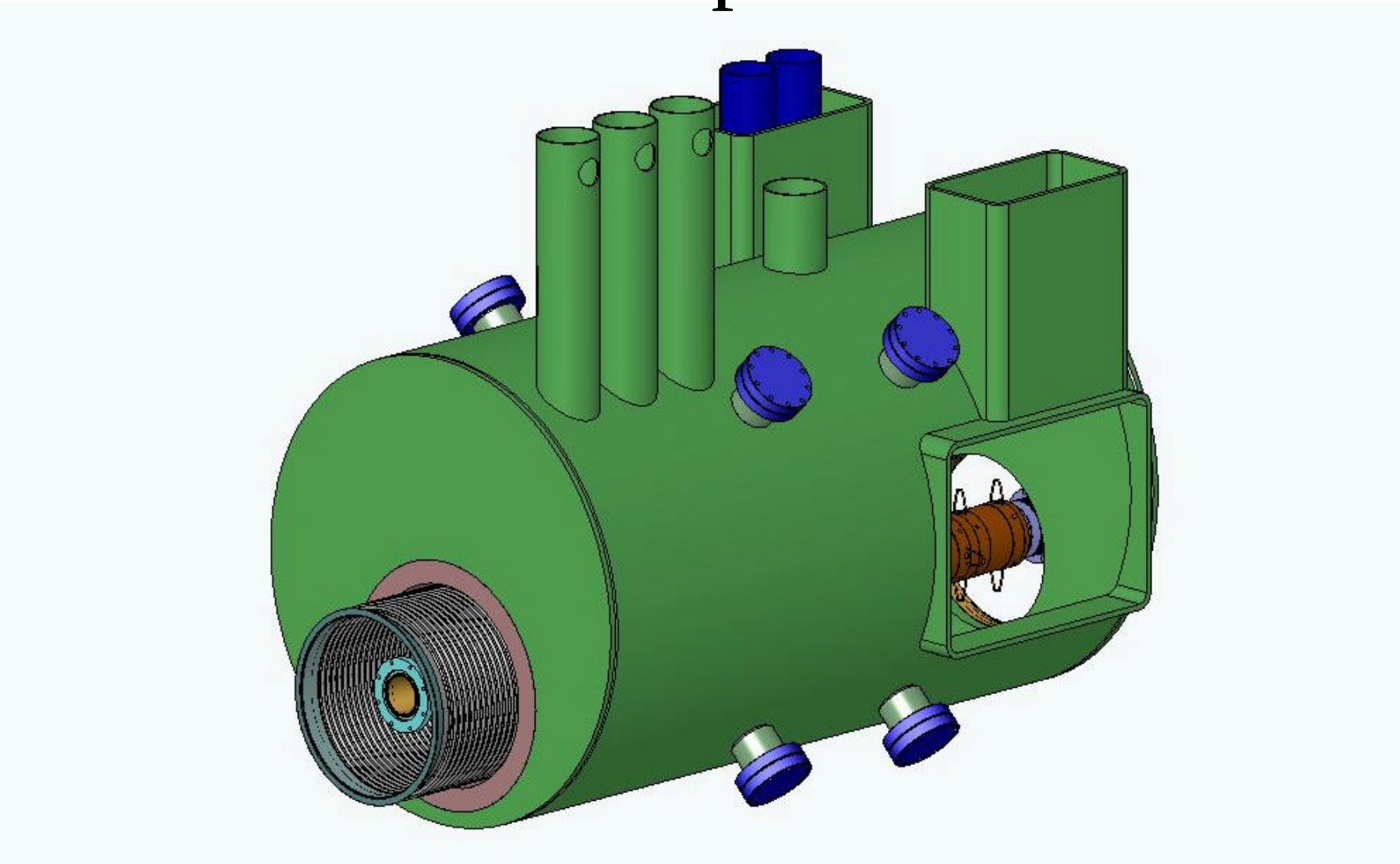

X2 Spool

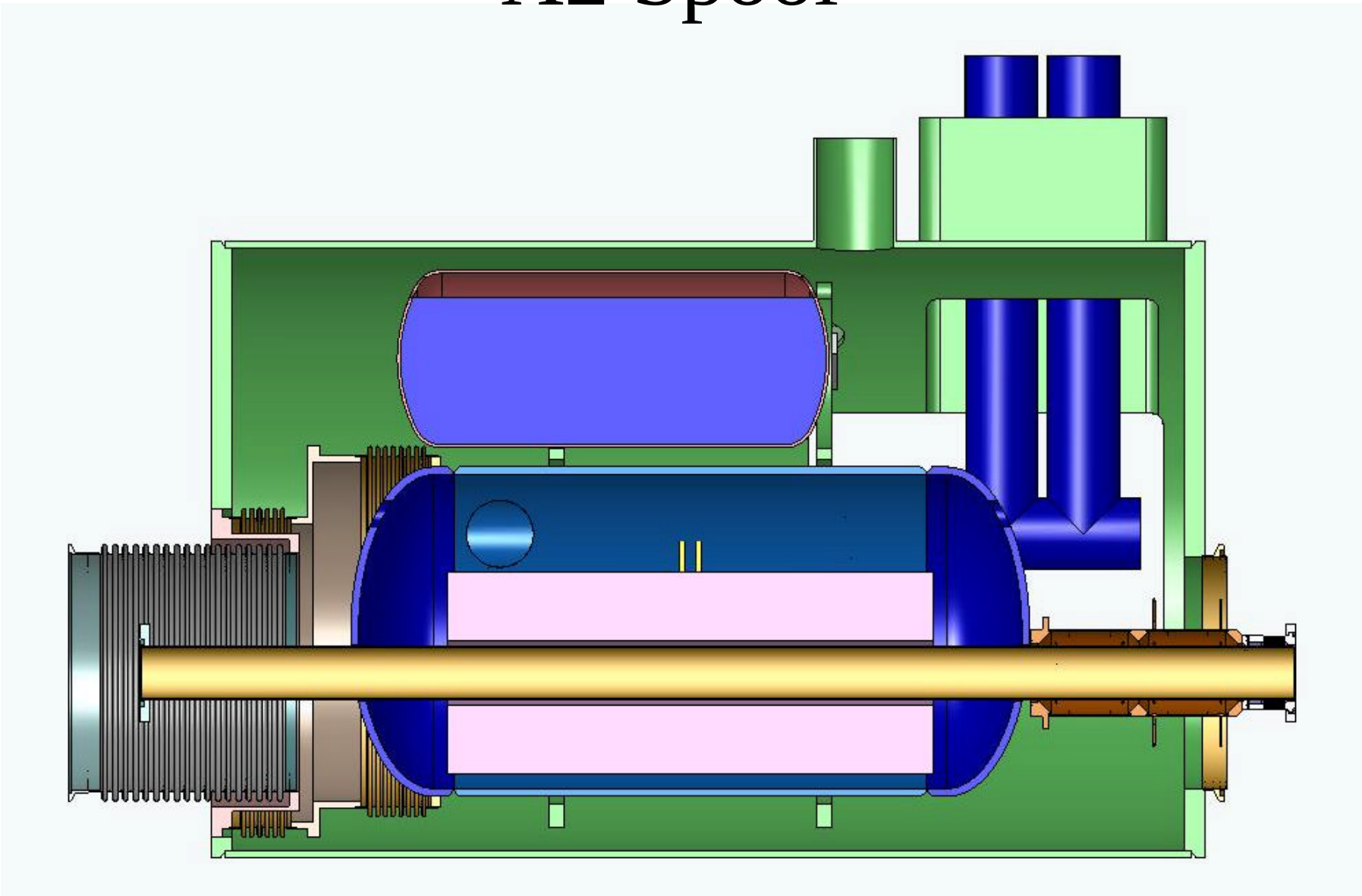

X3 Spool

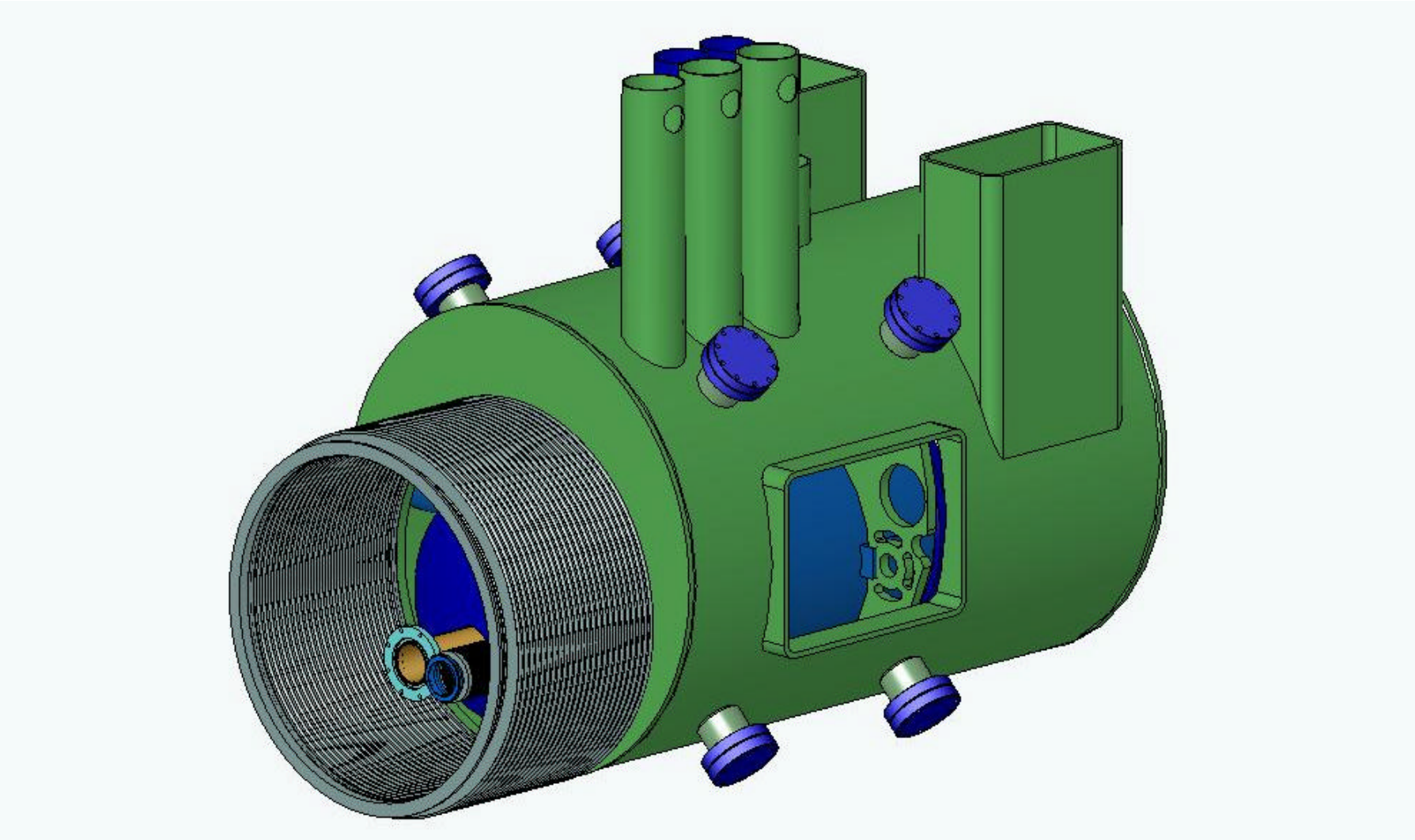

X3 Spool

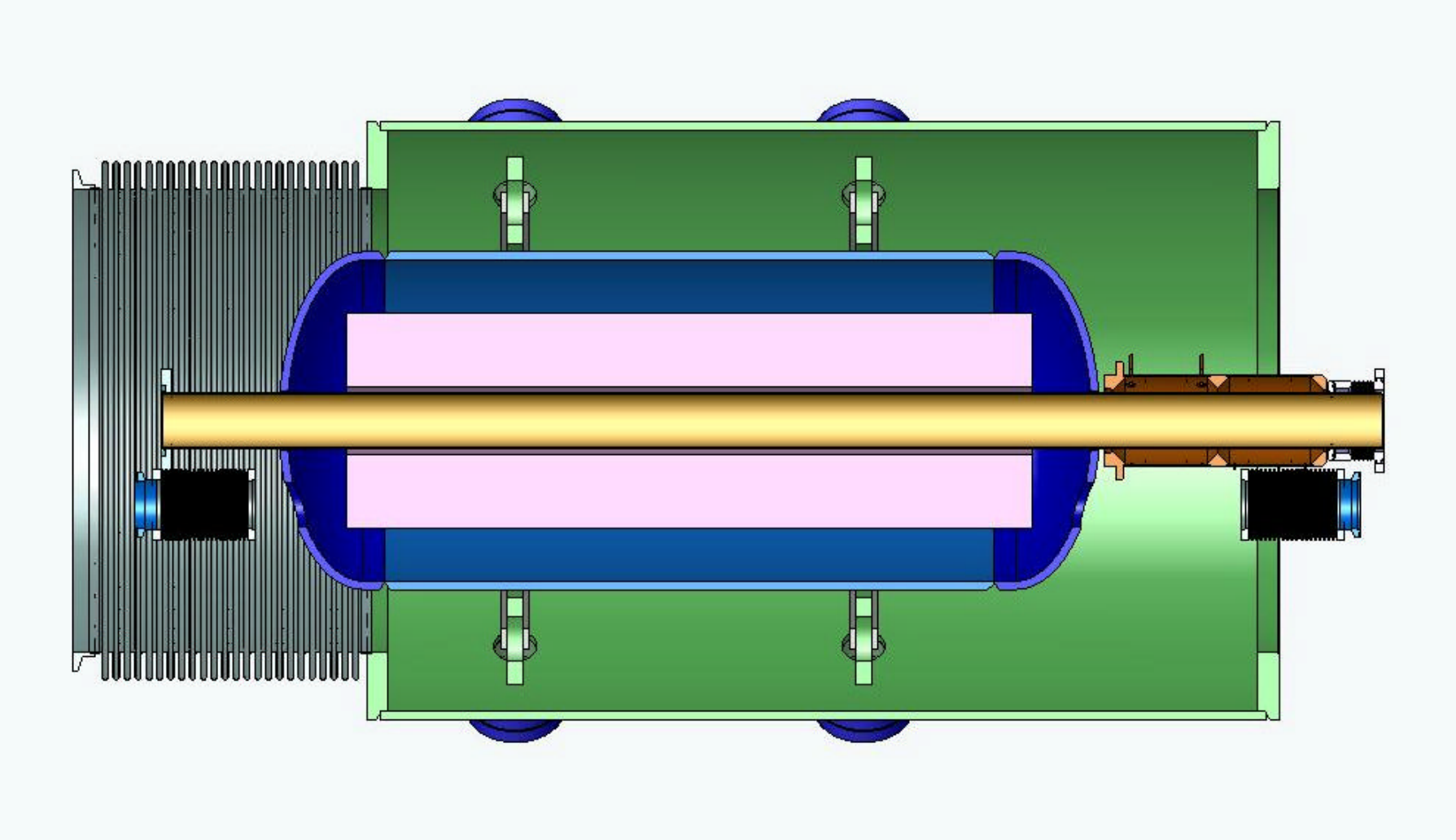

Support Spider

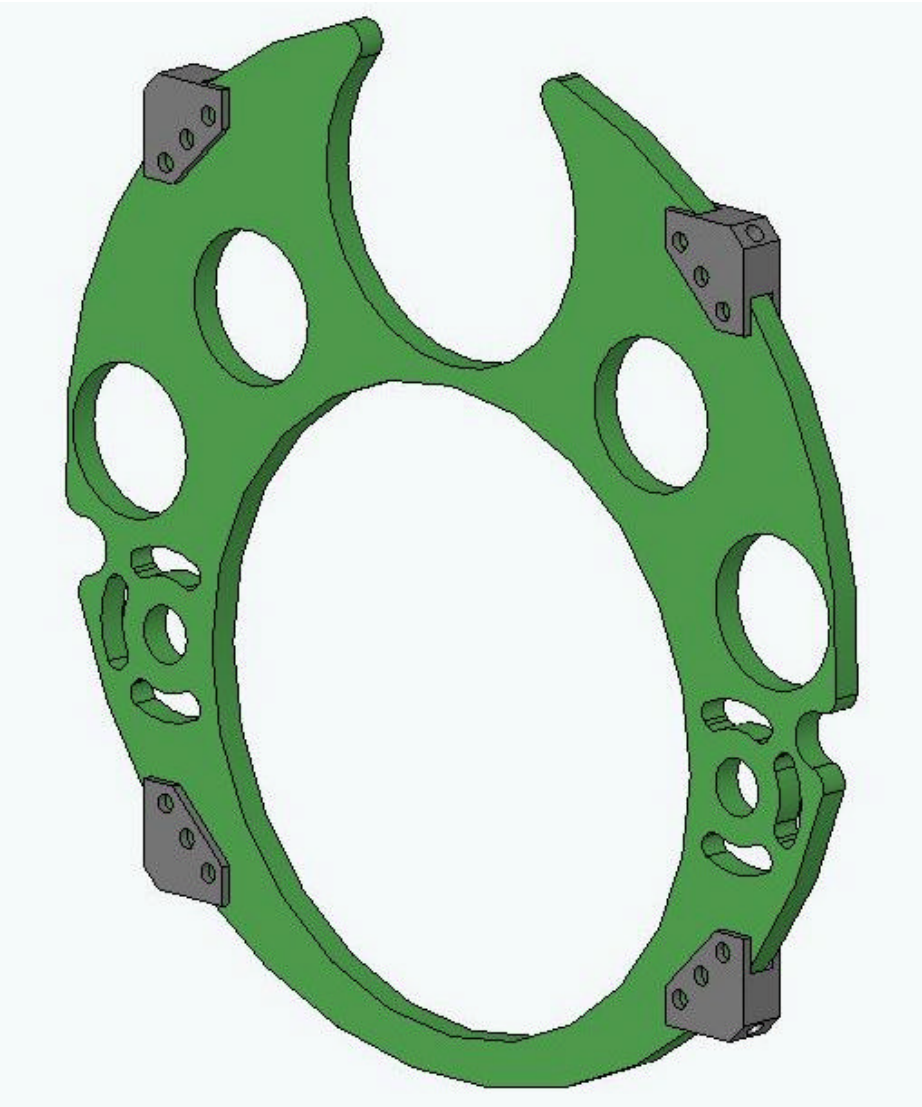

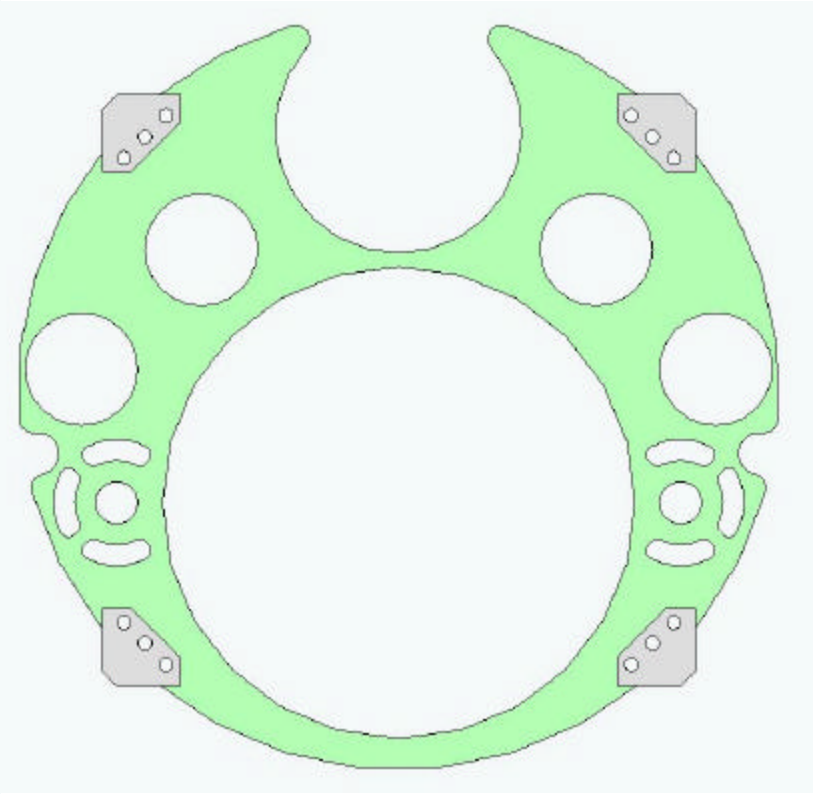

Helium Vessel Assembly (X2)

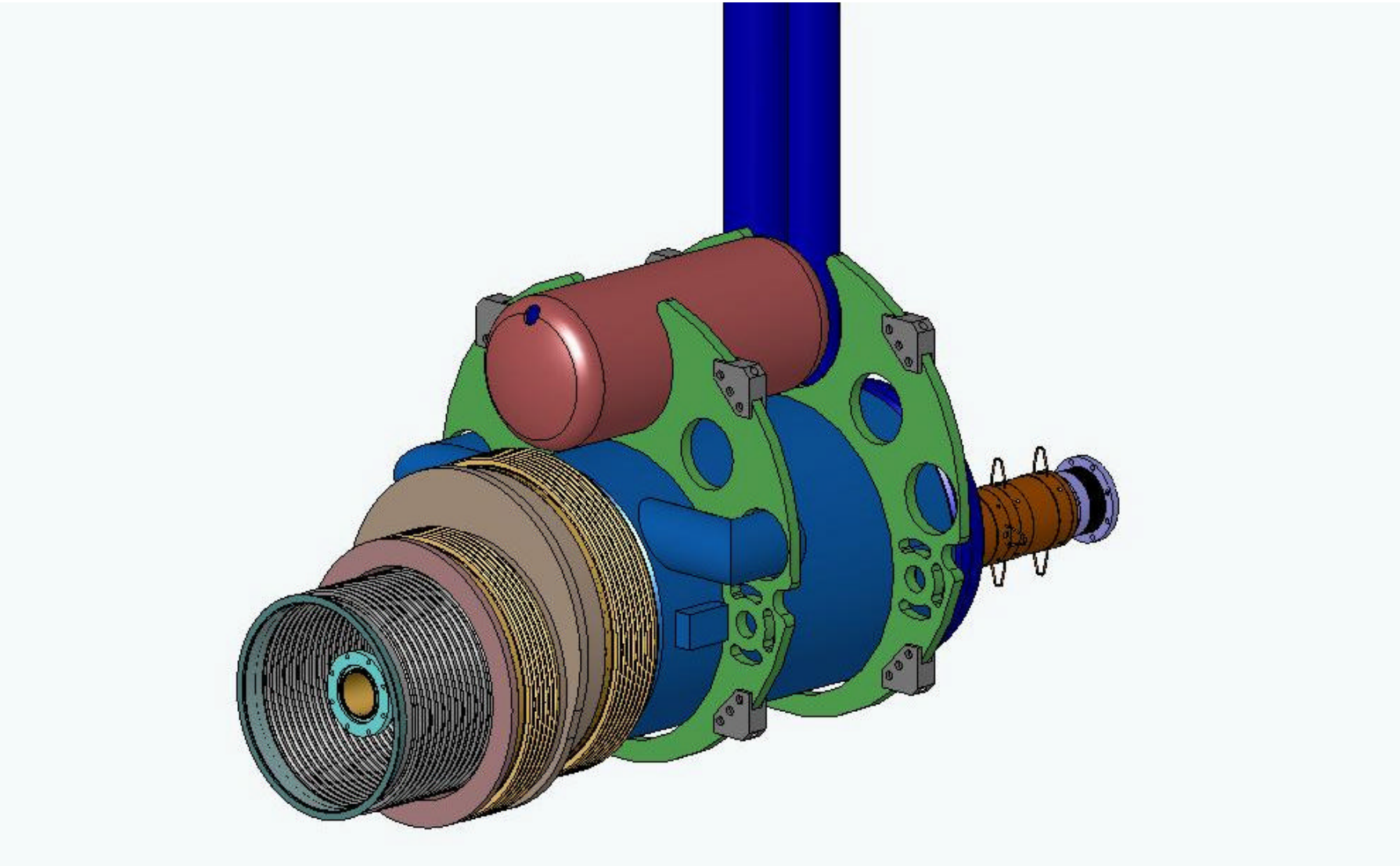

Helium Vessel Assembly (X2)

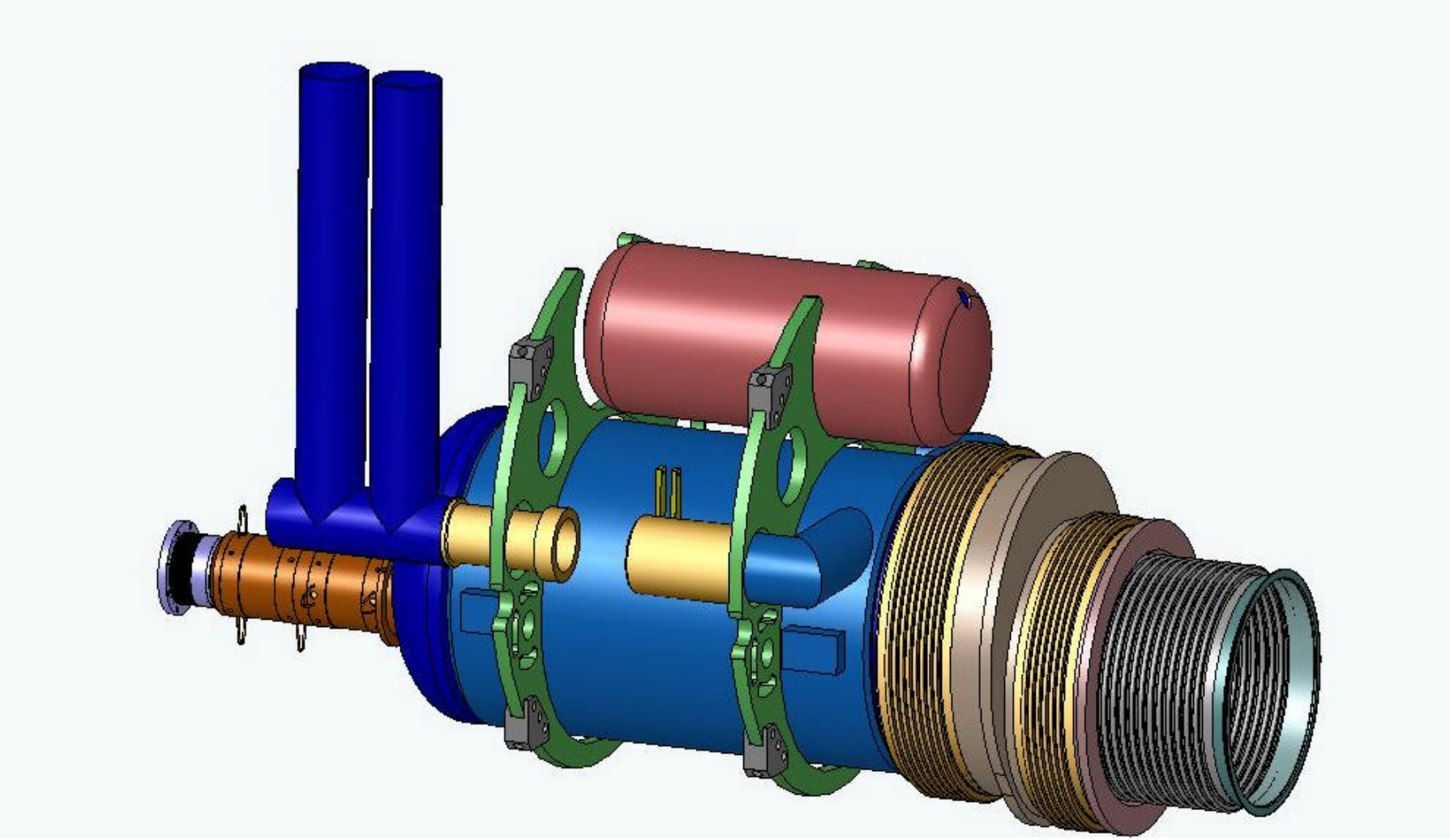

X1 Spool

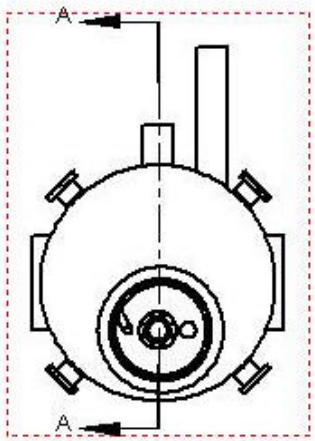
A
A

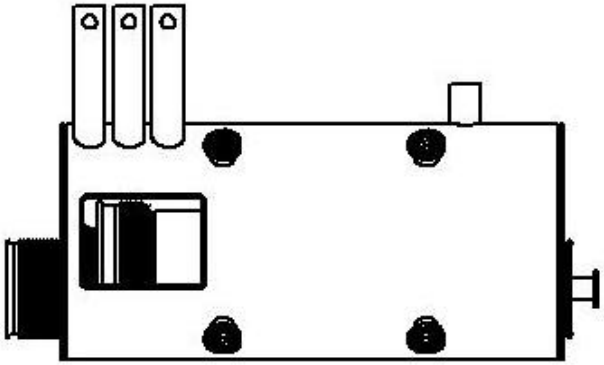

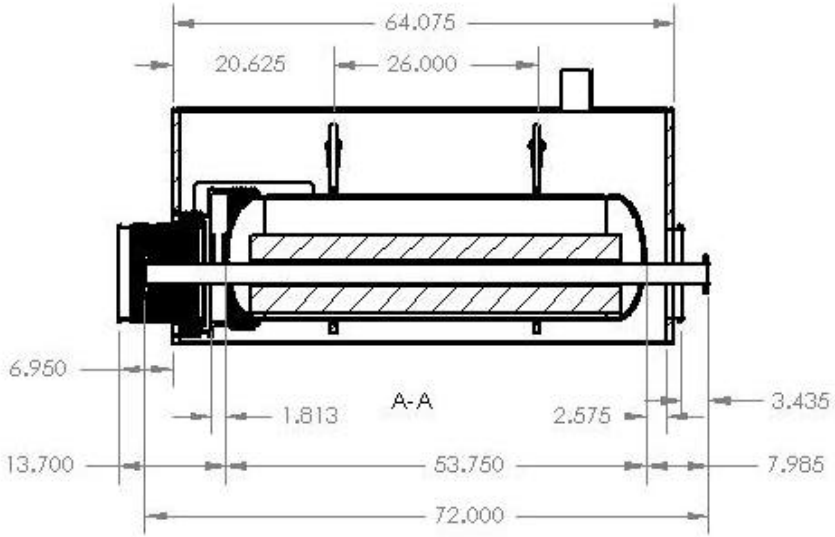
64.075
20.625
26.000
6.950
1.813
A-A
2.675
3.435
13.700
53.750
7.985
72.000

X2 Spool

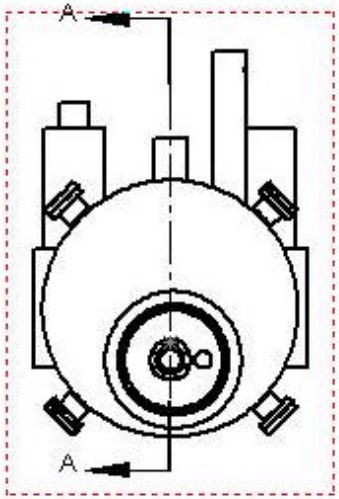

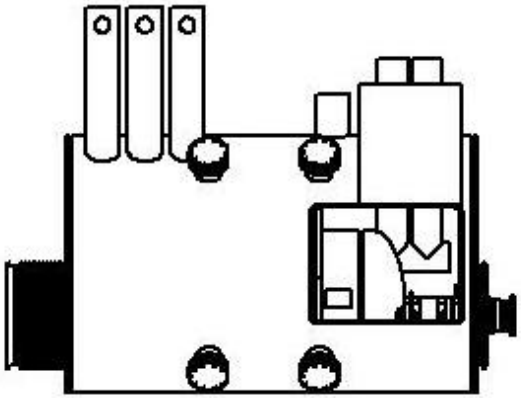

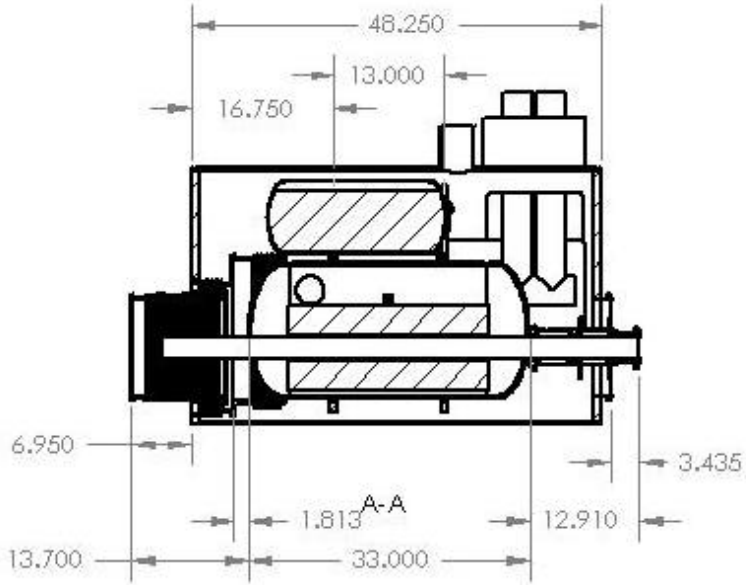

X3 Spool

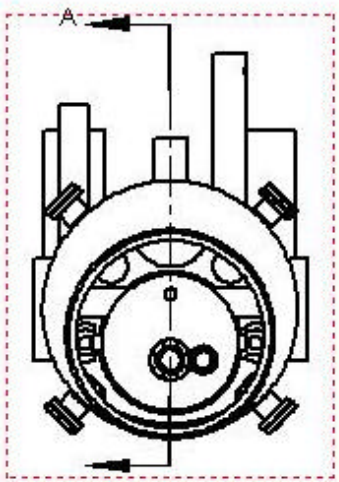

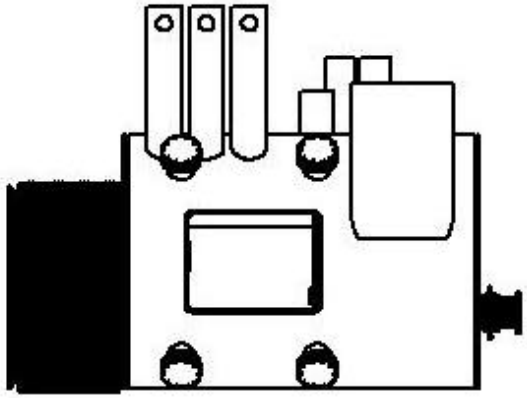

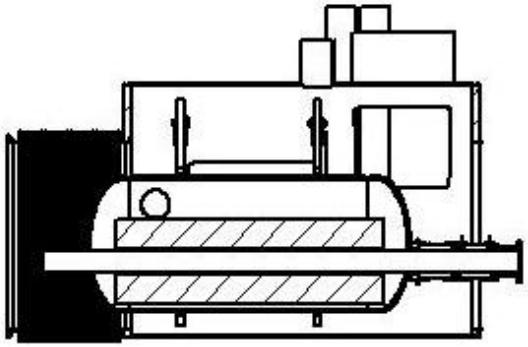

A-A