October 14, 2003
A. Zlobin

New correctors for BTeV

1. Approach and design goals:
   - low operation current ~50 A
   - high margin ~50%
   - simple, effective design – separate correctors packaged in longitudinal direction

2. Corrector parameters:

	Sextupole	Quadrupole	Dipole	Comments
n	2	1	0	
Rin_iron, mm	55	55	55	Can be reduced to 49 mm which would increase the magnet strength especially for D and Q
Rin_coil, mm	40	40	40	Could be reduced to 35-36 mm which increases Q and S strength and reduces coil volume in all correctors
? r, mm	8	8	8	2 layers
Total number of turns	4560	432	4560	
L, H/m	4.26	6.47	16.69	
W, kJ/m @50A	5.3	8.1	20.9	
Inom/Ic(4.2K)	0.49	0.51	0.58	
Inom, A	50	50	50	
Required strength, $T*m/m^n$	450	7.5/25	0.48	
Strength at 50A, T/m^n	1147	52.4	2.72	
Magnetic length, m	0.392	0.143/0.477	0.176	
Mechanical length, m	0.5	0.25/0.6	0.38	Includes coil and saddles

D+Q+S=113/148 cm < 142/182 cm
D+D+S=126 cm < 142 cm
All corrector packages fit the available gaps.

3. Conductor:

Strand (*similar strand was used in UNK corrector models*):
- ?? Bare strand diameter - 0.3 mm
- ?? Insulated strand diameter - 0.36 mm
- ?? Cu/nonCu ratio – 2:1 (*I believe this parameter could be reduced to 1.5:1 which would increase the corrector margin*)
- ?? Jc(5T, 4.2K) – 2.75 kA/mm^2 (SSC)

Cable (*ribbon design, this technology is well known*):
- ?? Number of layers – 1
- ?? Number of strands – 10
- ?? Width – 3.6 mm
- ?? Small thickness – 0.32 mm
- ?? Large thickness – 0.38 mm
- ?? Insulation – 0.025 mm

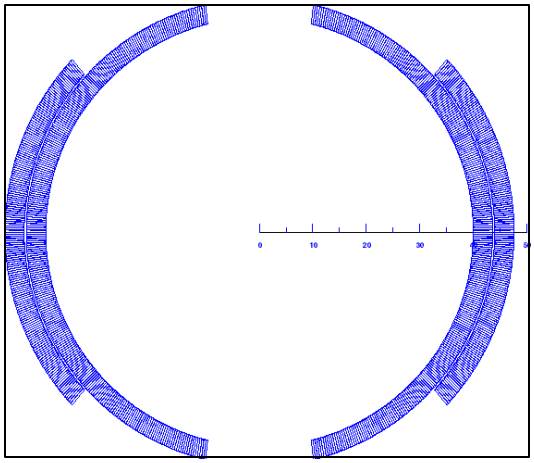

MAIN FIELD: -2.72302
NORMAL REL. MULTIPOLES (1.D-4):

b 1:	10000.00000	b 2:	0.00000	b 3:	0.28608
b 4:	0.00000	b 5:	-2.04319	b 6:	0.00000
b 7:	-12.34659	b 8:	0.00000	b 9:	-3.02231
b10:	0.00000	b11:	3.04107	b12:	0.00000
b13:	-0.79544	b14:	0.00000	b15:	0.15444
b16:	0.00000	b17:	-0.04985	b18:	0.00000

BLOCK NUMBER 1
PEAK FIELD IN CONDUCTOR 142 .(T) 3.113
LOWEST FIELD IN CONDUCTOR 1 .(T) 1.263
SUPERCONDUCTOR CURRENT DENSITY (A/MM^2) 1473.657
COPPER CURRENT DENSITY (A/MM^2) 736.828
PERCENTAGE ON THE LOAD LINE 57.922
QUENCHFIELD (T) 5.374
PERCENTAGE OF SHORT SAMPLE CURRENT 38.904
PEAK FIELD / MAIN FIELD 1.143

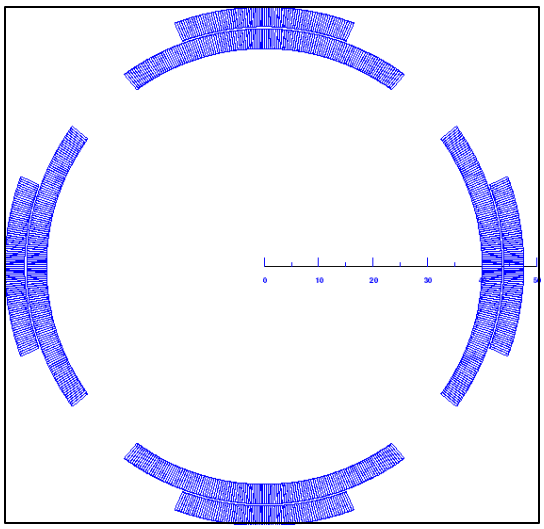

MAIN FIELD: -1.32877
NORMAL REL. MULTIPOLES (1.D-4):

b 1:	0.00000	b 2:	10000.00000	b 3:	0.00000
b 4:	0.00000	b 5:	0.00000	b 6:	0.95365
b 7:	0.00000	b 8:	0.00000	b 9:	0.00000
b10:	-3.02539	b11:	0.00000	b12:	0.00000
b13:	0.00000	b14:	0.54676	b15:	0.00000
b16:	0.00000	b17:	0.00000	b18:	-0.18754

BLOCK NUMBER 1
PEAK FIELD IN CONDUCTOR 67 .(T) 2.402
LOWEST FIELD IN CONDUCTOR 1 .(T) 0.820
SUPERCONDUCTOR CURRENT DENSITY (A/MM^2) 1473.65
COPPER CURRENT DENSITY (A/MM^2) 736.828
PERCENTAGE ON THE LOAD LINE 50.818
QUENCHFIELD (T) 4.727
PERCENTAGE OF SHORT SAMPLE CURRENT 35.266
PEAK FIELD / MAIN FIELD 1.808

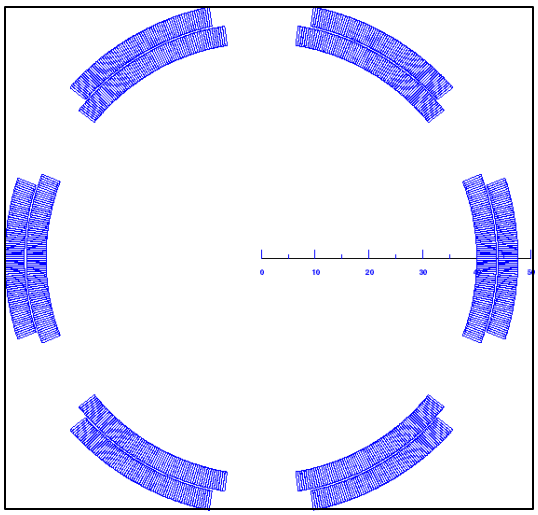

MAIN FIELD: -0.74201
NORMAL REL. MULTIPOLES (1.D-4):

b 1:	0.00000	b 2:	0.00000	b 3:	10000.00000
b 4:	0.00000	b 5:	0.00000	b 6:	0.00000
b 7:	0.00000	b 8:	0.00000	b 9:	0.43488
b10:	0.00000	b11:	0.00000	b12:	0.00000
b13:	0.00000	b14:	0.00000	b15:	-2.74894
b16:	0.00000	b17:	0.00000	b18:	0.00000

BLOCK NUMBER 1
PEAK FIELD IN CONDUCTOR 39 .(T) 2.196
LOWEST FIELD IN CONDUCTOR 1 .(T) 0.611
SUPERCONDUCTOR CURRENT DENSITY (A/MM^2) 1473.65
COPPER CURRENT DENSITY (A/MM^2) 736.828
PERCENTAGE ON THE LOAD LINE 48.751
QUENCHFIELD (T) 4.504
PERCENTAGE OF SHORT SAMPLE CURRENT 34.332
PEAK FIELD / MAIN FIELD 2.959