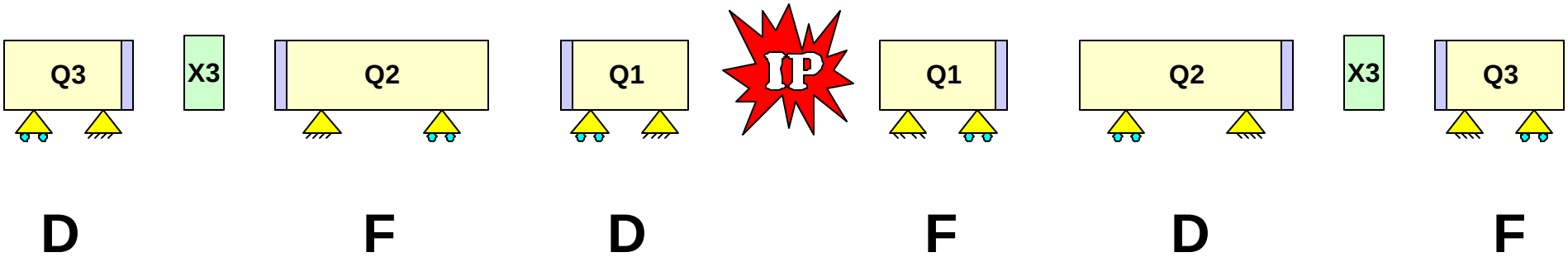
Q3
X3
Q2
Q1
IP
Q1
Q2
X3
Q3
D
F
D
F
D
F

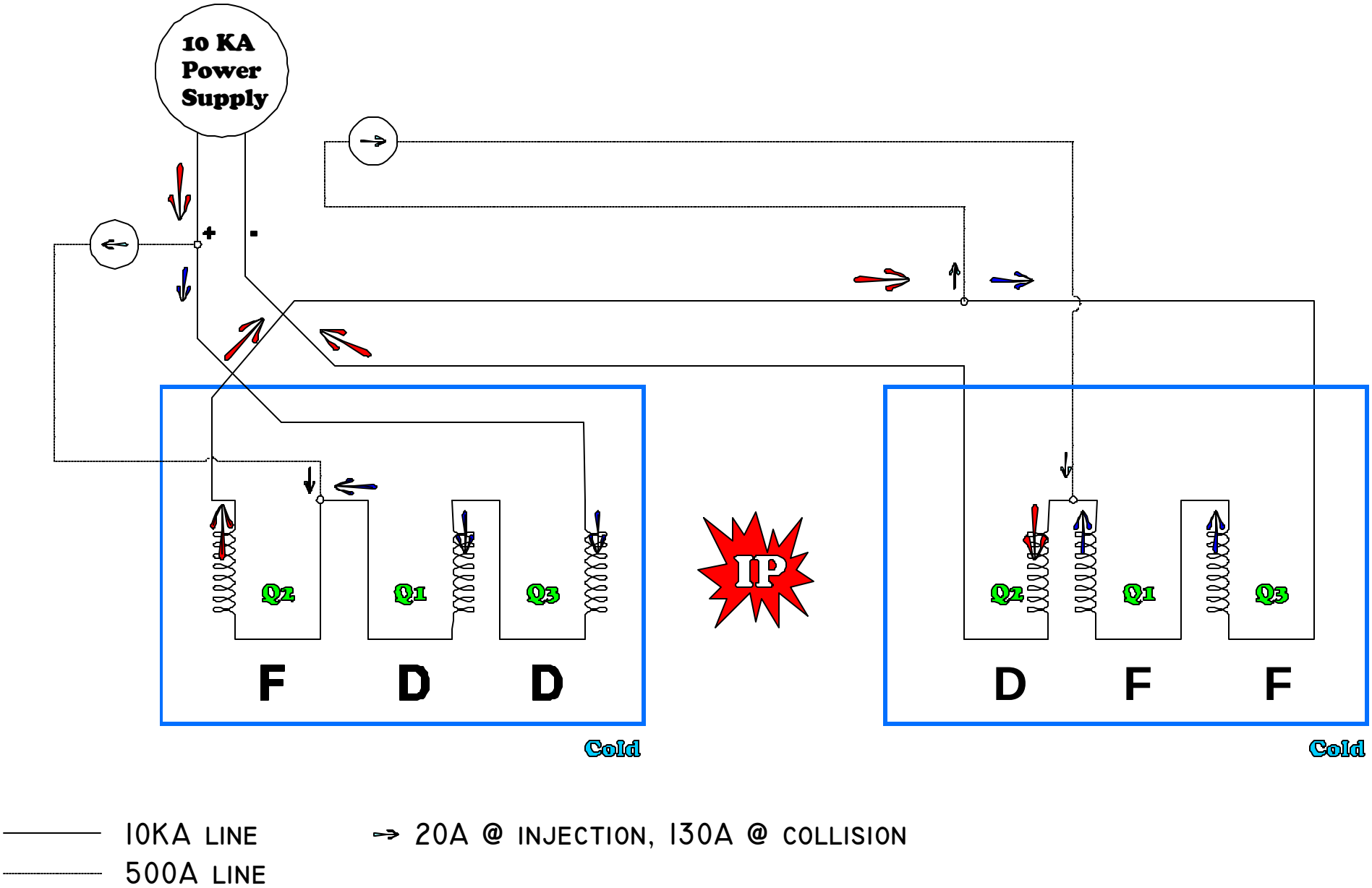
10 KA
Power
Supply
+
-
Q2
Q1
Q3
F
D
D
IP
Q2
Q1
Q3
D
F
F
Cold
Cold
10KA LINE
500A LINE
20A @ INJECTION, 130A @ COLLISION

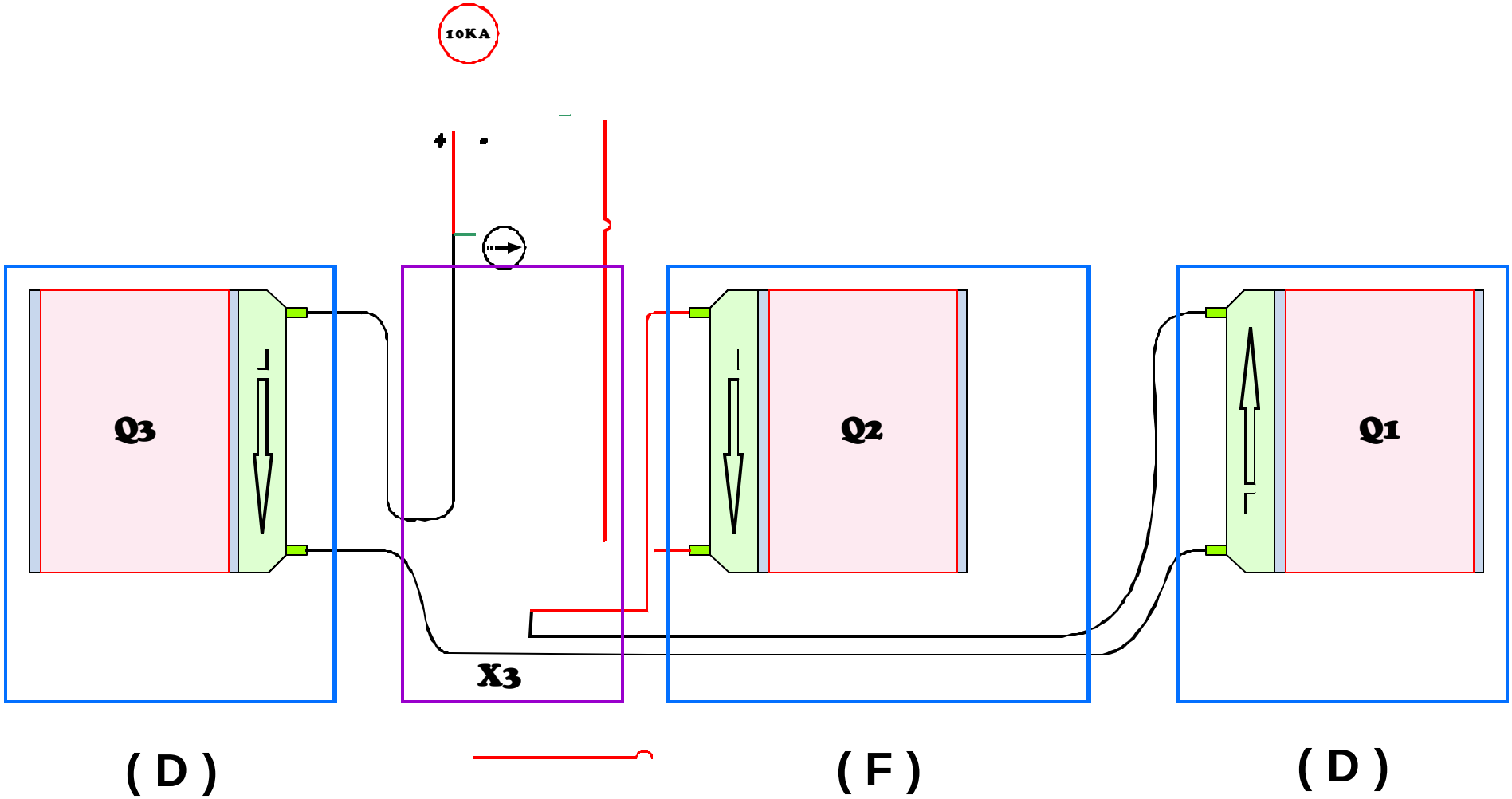

Red line: Q1 and Q3 feeding line

Black line: Q2 feeding line

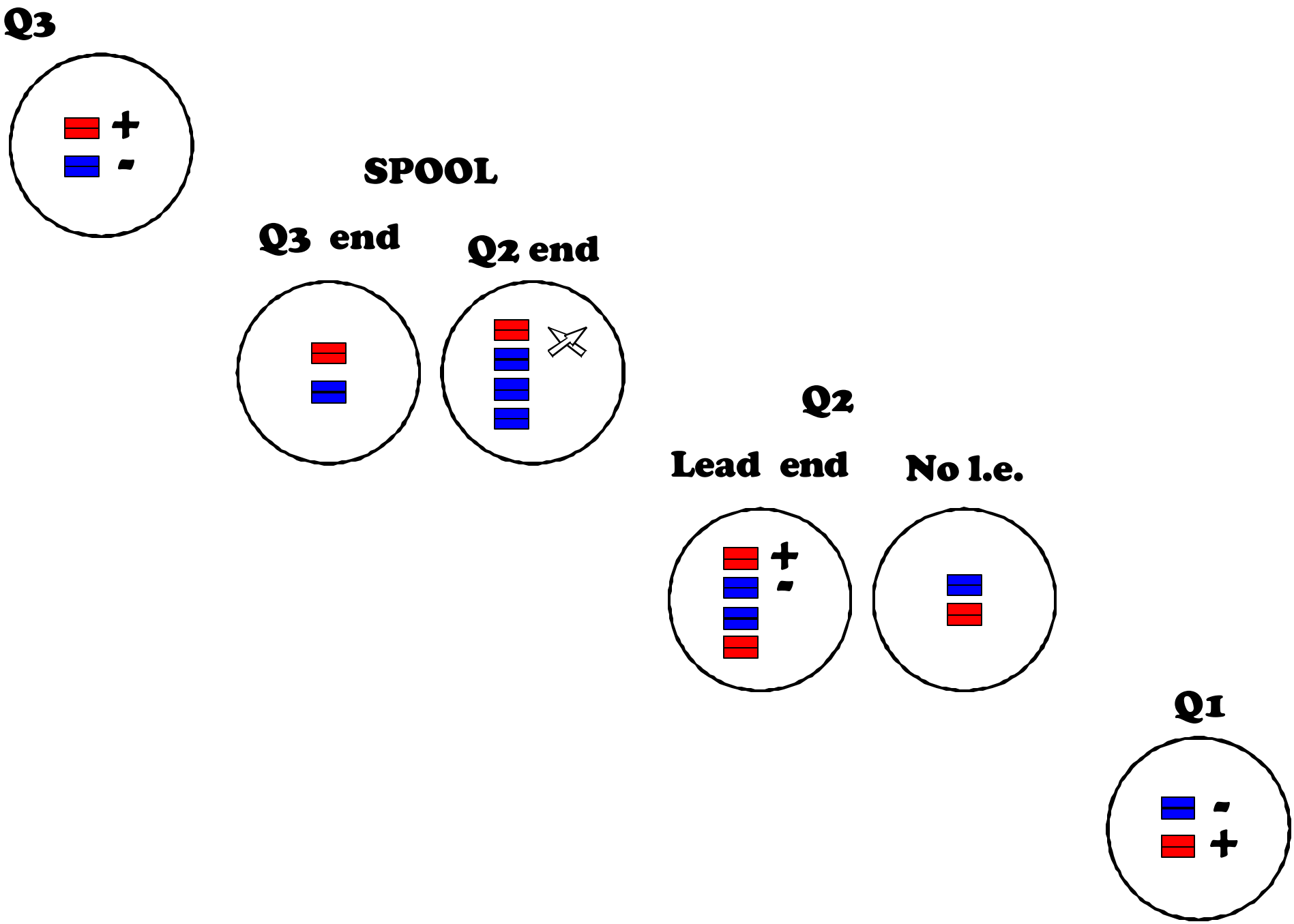
Q3
+
-
SPOOL
Q3 end
Q2 end
Q2
Lead end
No l.e.
+
-
Q1
-
+

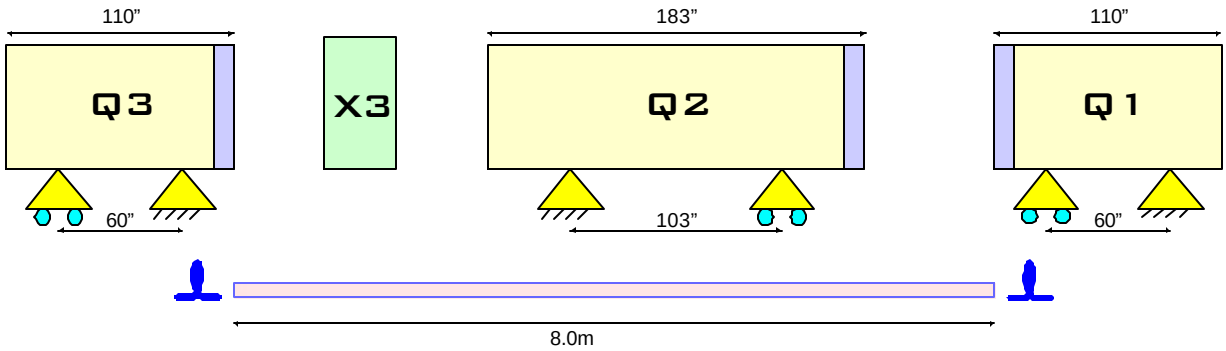

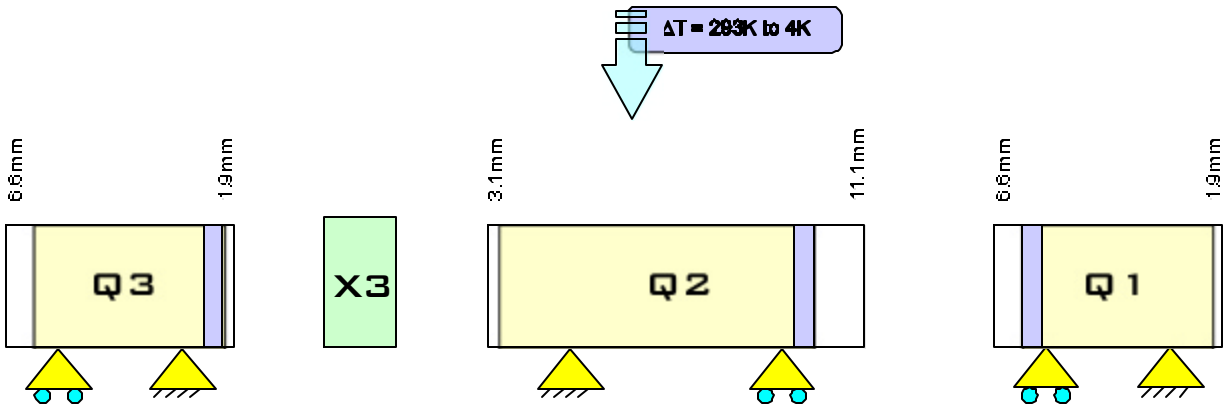

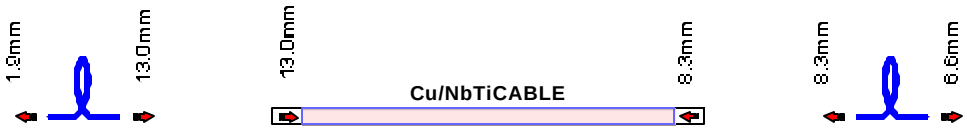

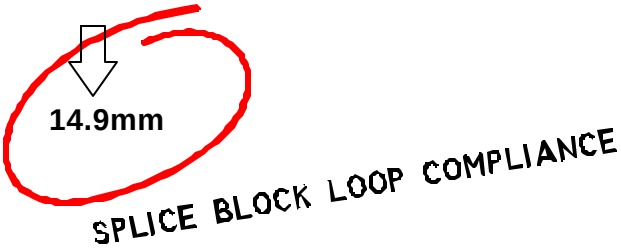

Magnetcoldmass(stainlesssteel) AISI304ThermalExpansion=0.306%for300Kto4K

Cablelead Cu/NiTiThermalExpansion=0.265%for300Kto4K

Leadend(Spliceblock)

Cablelead“yielding”anchorpoint-spliceblockloop