DANFYSIK

Quality Assurance Report
&
Assembly Drawing

for

2 pcs. Solenoid Magnets 0.28T
+ 1 Spare Coil

Customer:	Fermilab
Order No.:	500789
Shipment:	September 2009
Project Engineer:	Jesper Purup Kristensen

Magnet No. 09006 and 09007

Contents

- Specification 3
- Test for Magnet No. 09006 4
  - Complete magnet test 5
  - Dimension control 6
  - Coil test 7
  - Excitation curve 8
- Test for Magnet No. 09007 10
  - Complete magnet test 11
  - Dimension control 12
  - Coil test 13
  - Excitation curve 14
- Test for Spare Coil 16
  - Complete magnet test 17
  - Coil test 18
- Assembly drawing 19

DANFYSIK

ORDER:	USA 500789	**DATE:**	1 May 2009

Customer: FERMILAB
USA

DESCRIPTION: **Solenoid Magnet**

SPECIFICATION:	Maximum Field	B	:	0.28 T
	Free Aperture Diameter		:	280 mm
	Outer Diameter Yoke		:	584 mm
	Overall Length Solenoid		:	135 mm
YOKE:	Yoke Material		:	ST. 37
COIL DATA:	Coil Type		:	Hollow conductor
	Impregnation System		:	DF 3C
	Conductor Dimensions		:	7 x 7 / ø 4,5 mm
	Number of Turns	N	:	112 turns
	Cooling Type		:	Water cooling
	Min. Pressure Drop	Δp	:	5 Bar
	Total Flow Rate	dV/dt	:	7.5 l/min.
	Inlet Temperature	T_1	:	25°C
	Max. Temperature Rise	ΔT	:	38°C
	Current	I	:	500 A
	Voltage	U	:	40 V
	Power	P	:	20 kW
GENERAL DATA:	Total Copper Weight	W_{cu}	:	40 kg
	Total Iron Weight	W_i	:	150 kg
	Total Magnet Weight	W_{tot}	:	200 kg
	Field Clamps/End Covers		:	Yes
	Vacuum Chamber		:	No
	Flange Type		:	NA
	Magnet Support Frame		:	NO
	Adjustment "x-y-z"		:	NO
	Drawing		:	7103002041

Danfysik A/S • Møllehaven 16 • DK-4040 Jyllinge • Denmark
Tel. +45 4679 0000 • Fax +45 4679 0001 • danfysik@danfysik.dk • www.danfysik.com
VAT reg. No. DK 31 93 48 26 • Bankers: Danske Bank, Denmark

Tests for

Magnet No.: 09006

DANFYSIK QUALITY ASSURANCE SYSTEM

Document No: 120

DANFYSIK	Magnet No.: 09006 1.	Date: 24/08-2009
Assy. DWG. No.: **7103002041**	Customer: **FermiLab**	Order No : **USA 500789-2 - 100** Solenoid Magnet

COMPLETE MAGNET TEST

No.	DESCRIPTION	RESULTS	SIGN.
1	Visual inspection	ok	FPk
2	Dimensional control, main dimensions See DWG. No. 7103002041	ok	FPk
3	Electrical resistance at 20°C	77,9 mOhm	
4	Insulation test: conductor to ground (Yoke) 2 kV DC for one min. (I < 20 µAmp)	OK <0,2 µAmp	2-9-09
5	Hydraulic leak test 20 bar - 10 min.	OK	2-9-09
6	Water flow measurement at ΔP = 5 bar	4,4 BAR l/min.	
7	Full power test : Duration: 1 hour Field setting: B = _____ T (Dipole) Solenoide	T_{Inlet} = 21 °C T_{Outlet} = 63 °C Coil Temp. ΔT = 42 °C $T_{Surface}$ = 22 °C Room. ΔP = 4,4 Bar Q = 6,4 l/min U = 42,77 Volt I = 501,8 Amps	
8	Thermo switch test	OK 4×80°C	2-9-09
9	Corrosion protection		
10	Data label		

Remarks:

Production Control:	Project Manager:
Sign: 24/09-2009	Sign:

DANFYSIK QUALITY ASSURANCE SYSTEM

1.

Document No: 130

DANFYSIK	Magnet No.: 09006	Date: 12/7-09
Assembly DWG. No.: 7103002030	Customer: Fermilab	Order No : USA 500789-2 Solenoid magnet

Pin hole position check

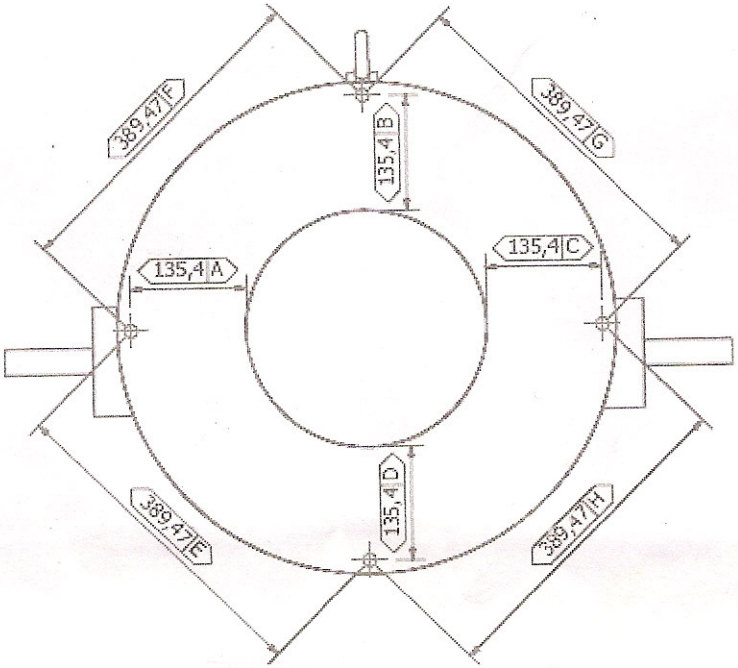

Dimension to be measured	Measured value by subcontractor	Dimension to be measured	Measured value by subcontractor
A	135,39	E	389,49
B	135,30	F	389,43
C	135,12	G	389,42
D	135,31	H	389,47

Remarks:

Production Control:	Project Manager:
Sign: O. F	Sign: Jesper Rusup

DANFYSIK A/S · DK-4040 Jyllinge · Denmark · Phone: +45 46790000 · Fax: +45 46790001 E-mail : danfysik@danfysik.dk

DANFYSIK QUALITY ASSURANCE SYSTEM

Document No: 080

DANFYSIK A/S Jyllinge, DENMARK	Coil No.: 1	Date: 09-08-19
Dwg. No.: **7103002026**	Customer:	Order No.: **500789-2 - 100** Solenoid coil

TESTING OF COILS

No.	TESTS BEFORE IMPREGNATION	RESULTS		SIGN.
1	Dimensional control	A:	284.5 – 285.5	LÄB
		B:	504 – 508	
		C:	67,5 – 68.5	
		D:	—	
2	Electrical resistance at 20°C	— mOhm		—
3	Interturn insulation test 10 Volts per turn	OK		FP
4	Hydraulic leak test 20 bar - 10 min.	OK		FP
5	Water flow measurement ΔP = 5 bar	1,9 – 2.0 l/min.		
No.	**TESTS AFTER IMPREGNATION**	**RESULTS**		**SIGN.**
6	Dimensional control	A:	284,5 - 285	SA
		B:	504 - 508	
		C:	66,5 - 68	
		D:	626	
7	Electrical resistance at 20°C	79,4 mOhm		SA
8	Interturn insulation test 10 Volts per turn	Ok		SA
9	Conductor to ground immersed in water 2 kV DC for one min. (I < 20 µAmp)	2,5 µAmp		SA
10	Hydraulic leak test 20 bar - 10 min.	Ok		SA
11	Water flow measurement ΔP = 5 bar	1,5 l/min.		SA

Remarks:

Production Control: Sirvan Abdollah - Power	Project Manager: Jonas Danielsson
Sign.:	Sign.:

DANFYSIK	Magnet No.: 9006	Date: 24-09-2009
Assembly drawing No.: **7103002041**	Customer: **FermiLab**	Order No.: **500789-2-100**

Probe placement: EXCITATION

Test setup and nominal magnet values

Probe placement:	Center of pole gap	Probe type:	Group3 Hall probe
Nominal field: [T]	0,28	Probe number:	1550
Nominal current: [A]	502	Teslameter number:	1047

No.	Current [A]	Hall probe field [T]	
1	0,0	0,00000	
2	50,0	0,02957	
3	100,0	0,05868	
4	150,0	0,08787	
5	200,0	0,11707	
6	250,0	0,14616	
7	300,0	0,17517	
8	350,0	0,20406	
9	400,0	0,23262	
10	450,0	0,26045	
11	475,0	0,27386	
12	500,0	0,28687	
13	525,0	0,29952	
14	550,0	0,31182	
15	525,0	0,29972	
16	500,0	0,28723	
17	475,0	0,27436	
18	450,0	0,26102	
19	400,0	0,23318	
20	350,0	0,20452	
21	300,0	0,17553	
22	250,0	0,14647	
23	200,0	0,11732	
24	150,0	0,08812	
25	100,0	0,05890	
26	50,0	0,02965	
27	0,0	0,00040	

Production Control: Date: Sign.:	Project Manager: Date: Sign.:

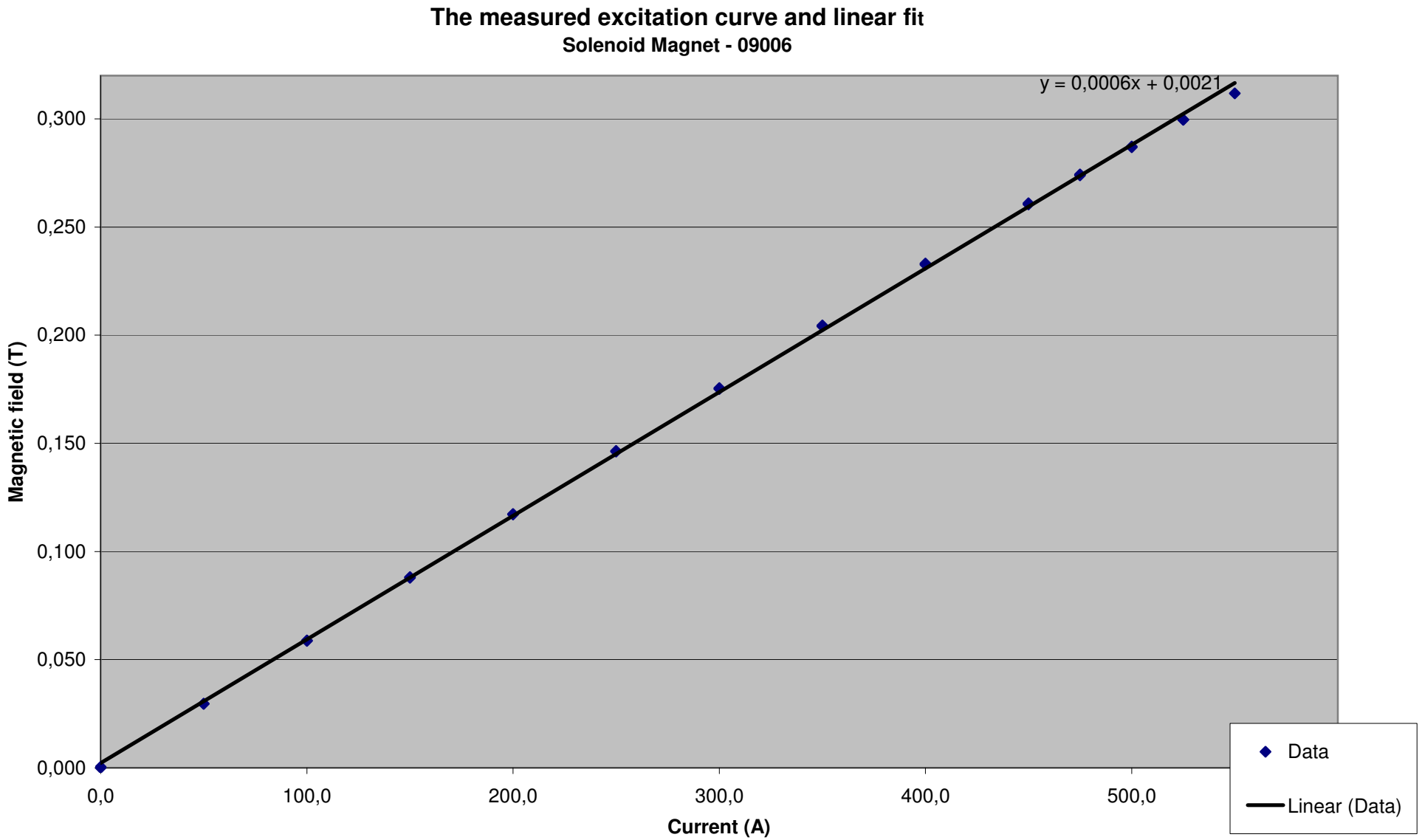
The measured excitation curve and linear fit
Solenoid Magnet - 09006
y = 0,0006x + 0,0021
0,300
0,250
0,200
0,150
0,100
0,050
0,000
Magnetic field (T)
0,0
100,0
200,0
300,0
400,0
500,0
Current (A)
Data
Linear (Data)

Tests for

Magnet No.: 09007

DANFYSIK QUALITY ASSURANCE SYSTEM

Document No: 120

DANFYSIK	Magnet No.: 0900_7 2	Date: 24/09-2008.
Assy. DWG. No.: **7103002041**	Customer: **FermiLab**	Order No : **USA 500789-2 - 100** Solenoid Magnet

COMPLETE MAGNET TEST

No.	DESCRIPTION	RESULTS	SIGN.
1	Visual inspection	Ok	JPk
2	Dimensional control, main dimensions See DWG. No. 7103002041	Ok	JPk
3	Electrical resistance at 20°C	77,8 mOhm	
4	Insulation test: conductor to ground (Yoke) 2 kV DC for one min. (I < 20 µAmp)	OK <0,2 µAmp	2-9-09
5	Hydraulic leak test 20 bar - 10 min.		
6	Water flow measurement at ΔP = 5 bar	5,0 Bar / 7,5 liter 4,65 BAR 7,0 l/min.	
7	Full power test : Duration: 1 hour Field setting: B = _____ T (~~Dipole~~ Solenoide) Intol ? = 5,75 outl. ? = 1,7 0,28807 Tesla/500A.	T_{Inlet} = 18,8 °C T_{Outlet} = 54,3 °C ΔT = 35,5 °C $T_{Surface}$ = 22,0 °C Room. ΔP = 4,65 Bar Q = 7,01 l/min U = 40,72 Volt I = 501,8 Amps	
8	Thermo switch test	OK 4x 80°C	2-9-09
9	Corrosion protection		
10	Data label		

Remarks: ΔP 5 BAR Intl. T. = 18° outl. = 53° ΔTemp = 34°C 501,8 Amp / 40,49 Volt.
Intl. = 6 outl. 1 BAR

Production Control:	Project Manager:
Sign: 24/09-2008	Sign:

2.

DANFYSIK QUALITY ASSURANCE SYSTEM

Document No: 130

DANFYSIK	Magnet No.: 0900_7	Date: 12/2-08
Assembly DWG. No.: 7103002030	Customer: Fermilab	Order No : USA 500789-2 Solenoid magnet

Pin hole position check

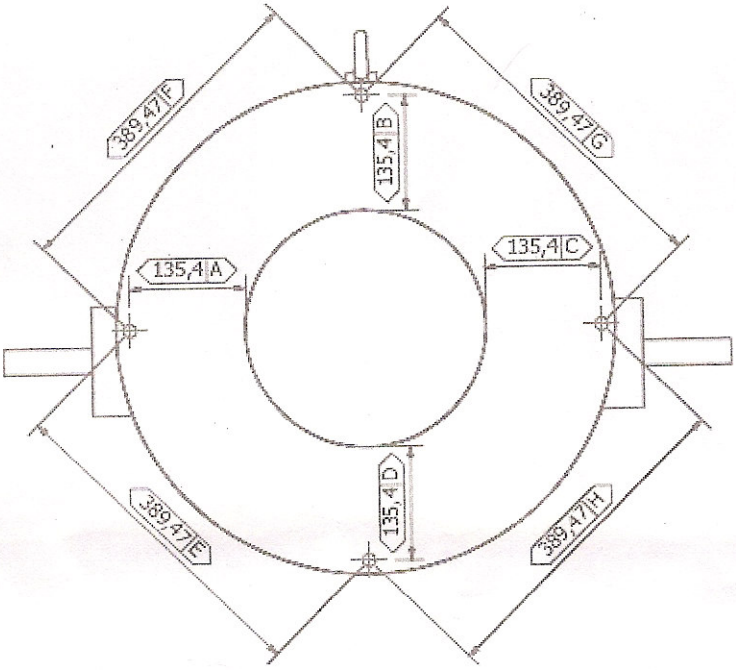

Dimension to be measured	Measured value by subcontractor	Dimension to be measured	Measured value by subcontractor
A	135,41	E	389,50
B	135,31	F	388,50
C	135,13	G	389,46
D	135,31	H	389,45

Remarks:

Production Control:	Project Manager:
Sign: O. 7	Sign: Jesper Rucup

DANFYSIK A/S · DK-4040 Jyllinge · Denmark · Phone: +45 46790000 · Fax: +45 46790001 E-mail : danfysik@danfysik.dk

DANFYSIK QUALITY ASSURANCE SYSTEM

Document No: 080

DANFYSIK A/S Jyllinge, DENMARK	Coil No.: 2	Date: 09-08-19
Dwg. No.: **7103002026**	Customer:	Order No.: **500789-2 - 100** Solenoid coil

TESTING OF COILS

No.	TESTS BEFORE IMPREGNATION	RESULTS		SIGN.
1	Dimensional control	A:	284 - 285	SA
		B:	504 - 506	
		C:	67 - 68	
		D:	—	
2	Electrical resistance at 20°C	— mOhm		—
3	Interturn insulation test 10 Volts per turn	Ok		FP
4	Hydraulic leak test 20 bar - 10 min.	Ok		FP
5	Water flow measurement ΔP = 5 bar	1,9 l/min.		SA
No.	**TESTS AFTER IMPREGNATION**	**RESULTS**		**SIGN.**
6	Dimensional control	A:	284 - 285	SA
		B:	504 - 506	
		C:	67 - 68	
		D:	625	
7	Electrical resistance at 20°C	78,5 mOhm		SA
8	Interturn insulation test 10 Volts per turn	Ok		SA
9	Conductor to ground immersed in water 2 kV DC for one min. (I < 20 µAmp)	3 µAmp		SA
10	Hydraulic leak test 20 bar - 10 min.	Ok		SA
11	Water flow measurement ΔP = 5 bar	1.5 l/min.		SA

Remarks:

Production Control: Sirvan Abdollah-Poor	Project Manager: Jonas Danielsson
Sign.:	Sign.:

DANFYSIK	Magnet No.: 9007	Date: 24-09-2009
Assembly drawing No.: **7103002041**	Customer: **FermiLab**	Order No.: **500789-2-100**

Probe placement: EXCITATION

Test setup and nominal magnet values

Probe placement:	Center of pole gap	Probe type:	Group3 Hall probe
Nominal field: [T]	0,28	Probe number:	1550
Nominal current: [A]	502	Teslameter number:	1047

No.	Current [A]	Hall probe field [T]	
1	0,0	0,00040	
2	50,0	0,02956	
3	100,0	0,05884	
4	150,0	0,08811	
5	200,0	0,11742	
6	250,0	0,14661	
7	300,0	0,17573	
8	350,0	0,20475	
9	400,0	0,23342	
10	450,0	0,26129	
11	475,0	0,27472	
12	500,0	0,28773	
13	525,0	0,30037	
14	550,0	0,31267	
15	525,0	0,30057	
16	500,0	0,28807	
17	475,0	0,27520	
18	450,0	0,26186	
19	400,0	0,23398	
20	350,0	0,20520	
21	300,0	0,17609	
22	250,0	0,14691	
23	200,0	0,11766	
24	150,0	0,08835	
25	100,0	0,05907	
26	50,0	0,02975	
27	0,0	0,00042	

Production Control: Date: Sign.:	Project Manager: Date: Sign.:

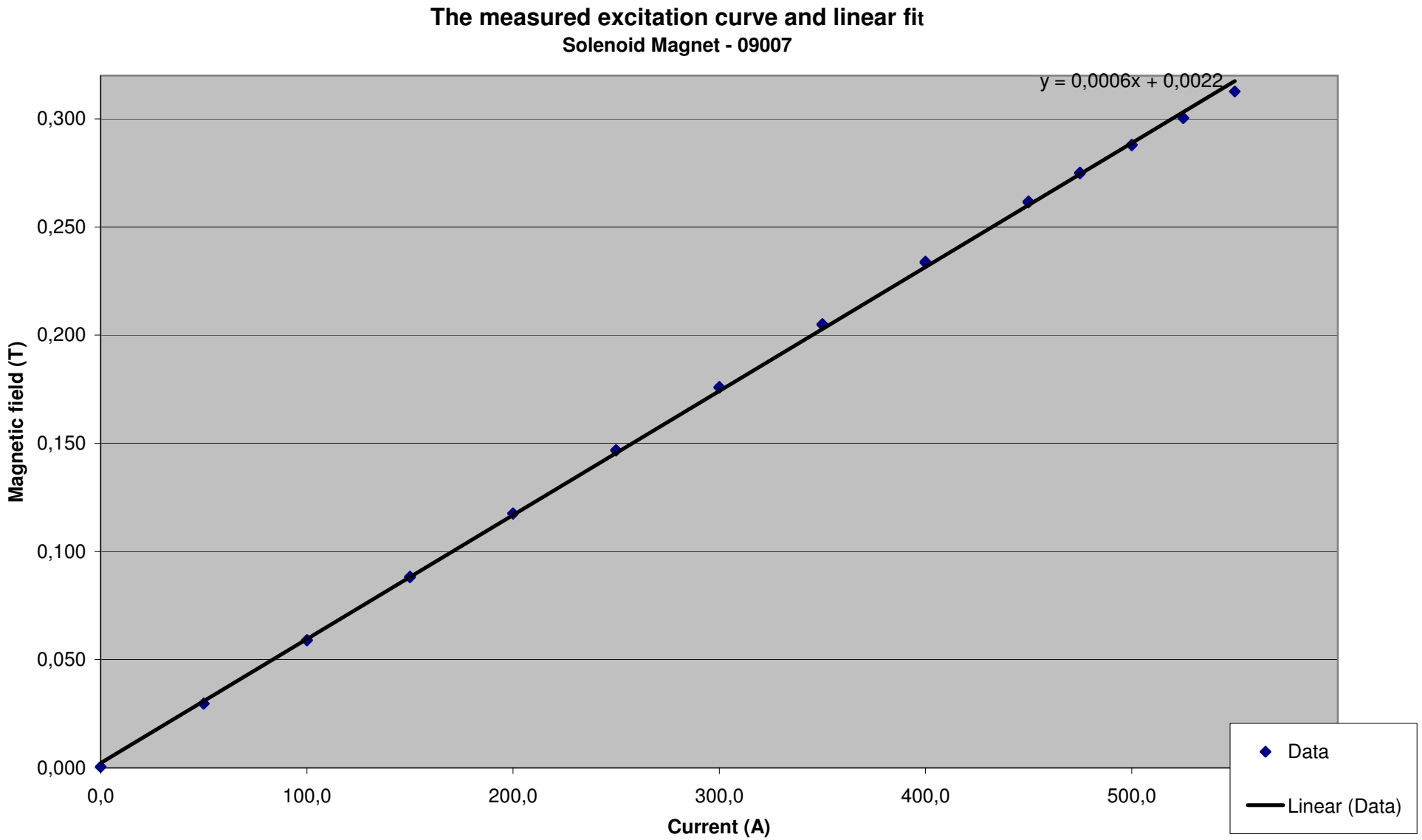
The measured excitation curve and linear fit
Solenoid Magnet - 09007
y = 0,0006x + 0,0022
0,300
0,250
0,200
0,150
0,100
0,050
0,000
Magnetic field (T)
0,0
100,0
200,0
300,0
400,0
500,0
Current (A)
Data
Linear (Data)

Tests for

Spare coil

DANFYSIK QUALITY ASSURANCE SYSTEM

Document No: 120

DANFYSIK	Magnet No.: ~~0900~~ Coil 3	Date: 24/9-09
Assy. DWG. No.: **7103002041**	Customer: **FermiLab**	Order No : **USA 500789-2 - 100** Solenoid Magnet

COMPLETE MAGNET TEST

No.	DESCRIPTION	RESULTS	SIGN.
1	Visual inspection	ok	JPk
2	Dimensional control, main dimensions See DWG. No. 7103002041	ok	JPk
3	Electrical resistance at 20°C	77,8 mOhm	[illegible]
4	Insulation test: conductor to ground (Yoke) 2 kV DC for one min. (I < 20 µAmp)	µAmp	
5	Hydraulic leak test 20 bar - 10 min.		
6	Water flow measurement at ΔP = ~~5 bar~~ 4,5 bar	7,2 l/min.	[illegible]
7	Full power test : Duration: 1 hour Field setting: B = _____ T (Dipole)	T_{Inlet} = 19 °C T_{Outlet} = 55 °C ΔT = 36 °C $T_{Surface}$ = 45 °C ΔP = _____ Bar Q = 7,2 l/min U = 40,58 Volt I = 502,0 Amps	[illegible]
8	Thermo switch test		
9	Corrosion protection		
10	Data label		

Remarks:

Production Control:	Project Manager:
Sign: [illegible]	Sign:

DANFYSIK A/S · DK-4040 Jyllinge · Denmark · Phone: +45 46790000 · Fax: +45 46790001 E-mail : danfysik@danfysik.dk

DANFYSIK QUALITY ASSURANCE SYSTEM

Document No: 080

DANFYSIK A/S Jyllinge, DENMARK	Coil No.: 3	Date: 09-08-19
Dwg. No.: **7103002026**	Customer:	Order No.: **500789-2 - 100** Solenoid coil

TESTING OF COILS

No.	TESTS BEFORE IMPREGNATION	RESULTS		SIGN.
1	Dimensional control	A:	284 - 285	SA
		B:	506 - 508	
		C:	67 - 68	
		D:	–	
2	Electrical resistance at 20°C	– mOhm		–
3	Interturn insulation test 10 Volts per turn	OK		FP
4	Hydraulic leak test 20 bar - 10 min.	OK		FP
5	Water flow measurement ΔP = 5 bar	1.9 l/min.		SA
No.	**TESTS AFTER IMPREGNATION**	**RESULTS**		**SIGN.**
6	Dimensional control	A:	284 - 285	SA
		B:	506 - 508	
		C:	67 - 68	
		D:	624	
7	Electrical resistance at 20°C	78.2 mOhm		SA
8	Interturn insulation test 10 Volts per turn	OK		SA
9	Conductor to ground immersed in water 2 kV DC for one min. (I < 20 µAmp)	3 µAmp		SA
10	Hydraulic leak test 20 bar - 10 min.	OK		SA
11	Water flow measurement ΔP = 5 bar	1.5 l/min.		SA

Remarks:

Production Control: Sirwan Abdollah-Pour	Project Manager: Jonas Danielsson
Sign.:	Sign.:

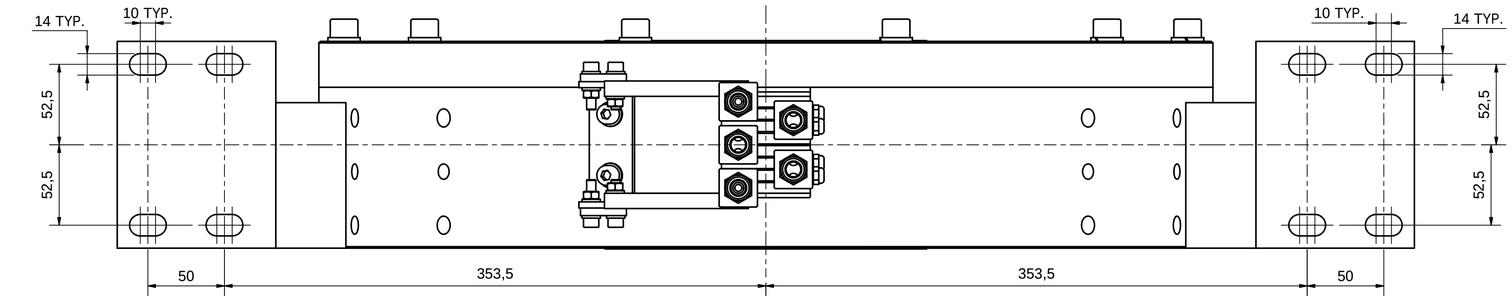

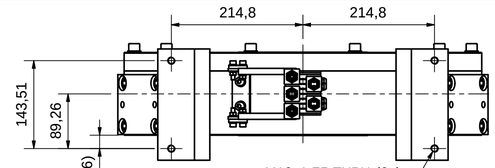

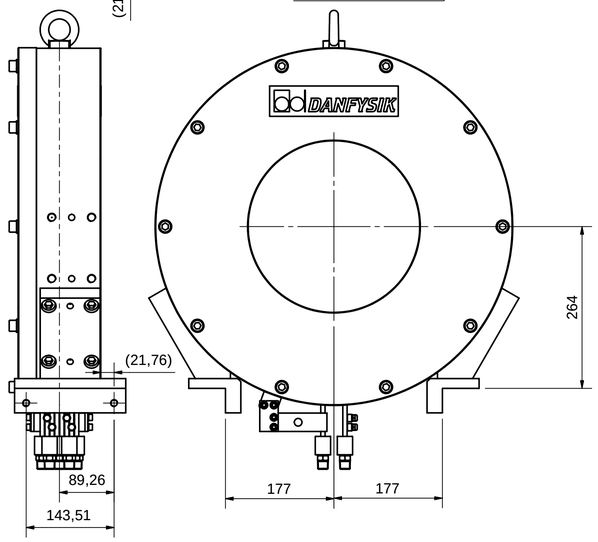

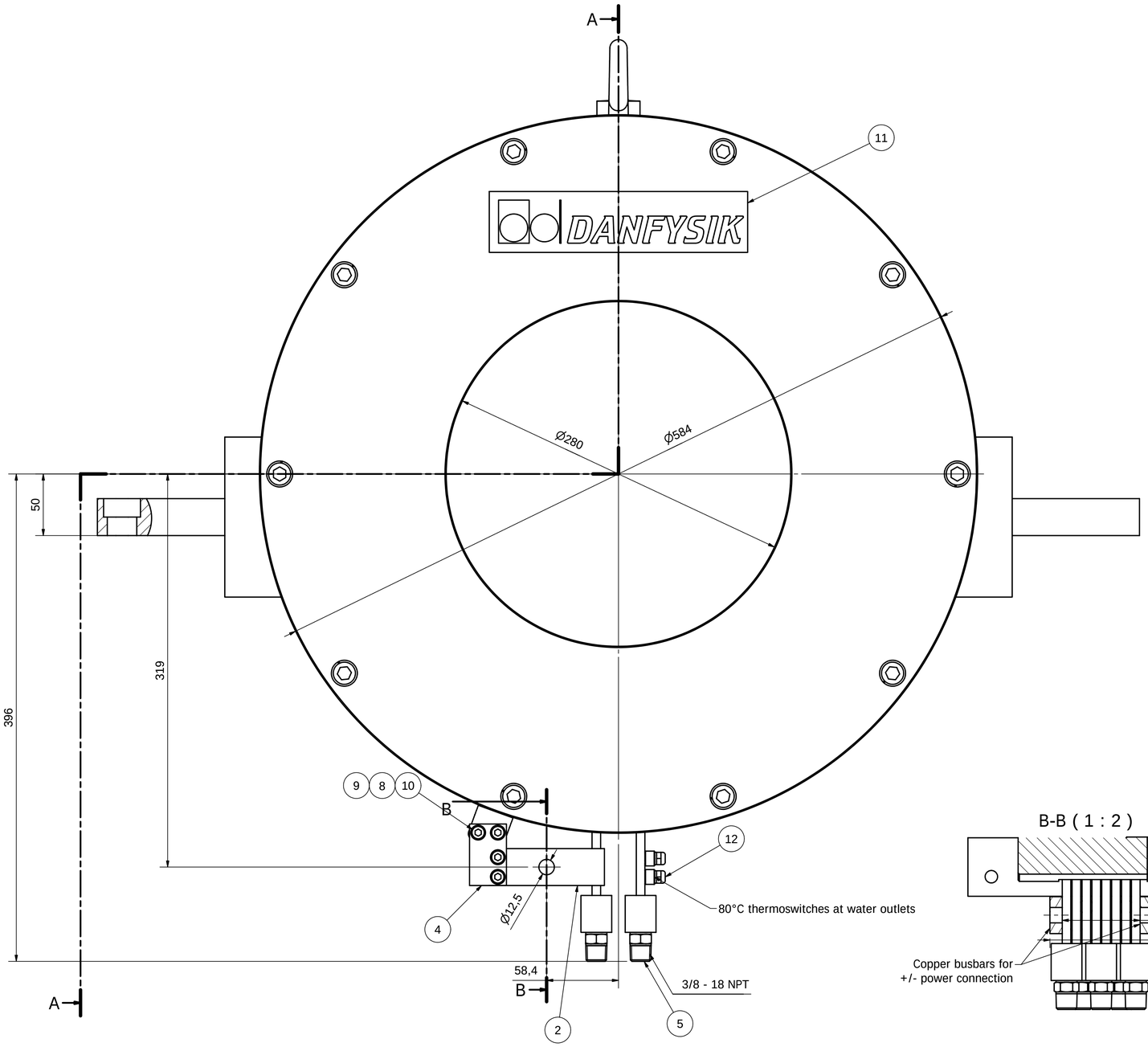

A-A (1 : 2)

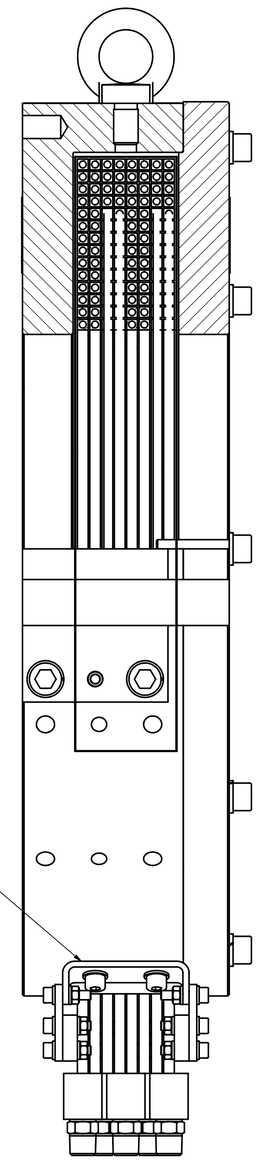

B-B (1 : 2)

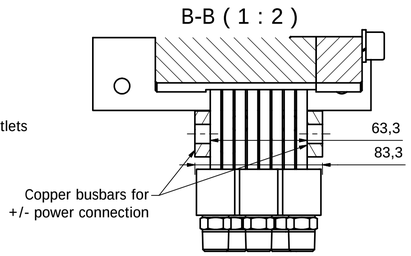

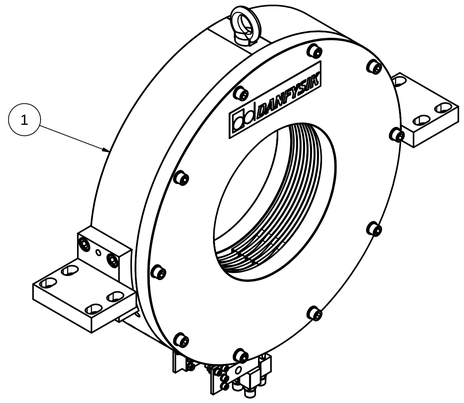

POS.	QTY.	DESCRIPTION	PRODUCT NO.	MATERIAL
12	4	Thermal Switch 80°C NC 1,6A	1400140080	Massless material
11	2	Printed Sign, "DANFYSIK" 49x210mm	5600010033	AlMgSi 1
10	8	ISO 4762 - M6 x 25	5200800359	Class 8.8 Zink Plated
9	8	ISO 4032 - M6	5300800036	Class 8.8 Zink Plated
8	16	ISO 7089 - 6 - FZB	5400800006	Steel, Zink plated
7	2	ISO 4762 - M8 x 16	5200800372	Class 8.8 Zink Plated
6	2	ISO 7089 - 8 - FZB	5400800008	Steel, Zink plated
5	5	Pipe fitting - 3/8in NPT - ISO Tap	9000012576	Stainless Steel
4	2	Isolation plate	7103002251	G-Etronax EP11
3	1	Bracket for Buss bar	7103002250	AISI 304
2	1	Coil assembly	7103002026	
1	1	Solenoid magnet yoke	7103002030	

DANFYSIK
DK-4040 Jyllinge, Denmark
Homepage: www.danfysik.dk
e-mail: danfysik@danfysik.dk
Phone: +45 7220 2400 Fax: +45 7220 2410

Size: A1
Customer:
Scale: 1:2
Order No.:
Surface machining: -
Surface treatment: -
Note: -
Material:
Mass: 207.1 kg

Important:
This document contains informations which are the property of DANFYSIK A/S Denmark. It is submitted to you in confidence that it will not be disclosed or transmitted to others or used for manufacturing without DANFYSIK's authorization in writing.

Projection:
Dimensions without tolerance indication: EN 22768 - mK

	Date:	Name:
App. by		
Check by	23-03-2009	jpk
Drawn by	30-04-2009	jpk

Description: Solenoid magnet
Typ FEL-Gun
Product No.: 7103002041
Rev.: C
Doc. No.:
CAD Program: Inventor AIS 2009
Plot date: 12-08-2009 14:59
File name: 7103002041.idw
Sheet: 1 of 1