DWG NO
TOTERBRAZE_ASSY_4P5CF

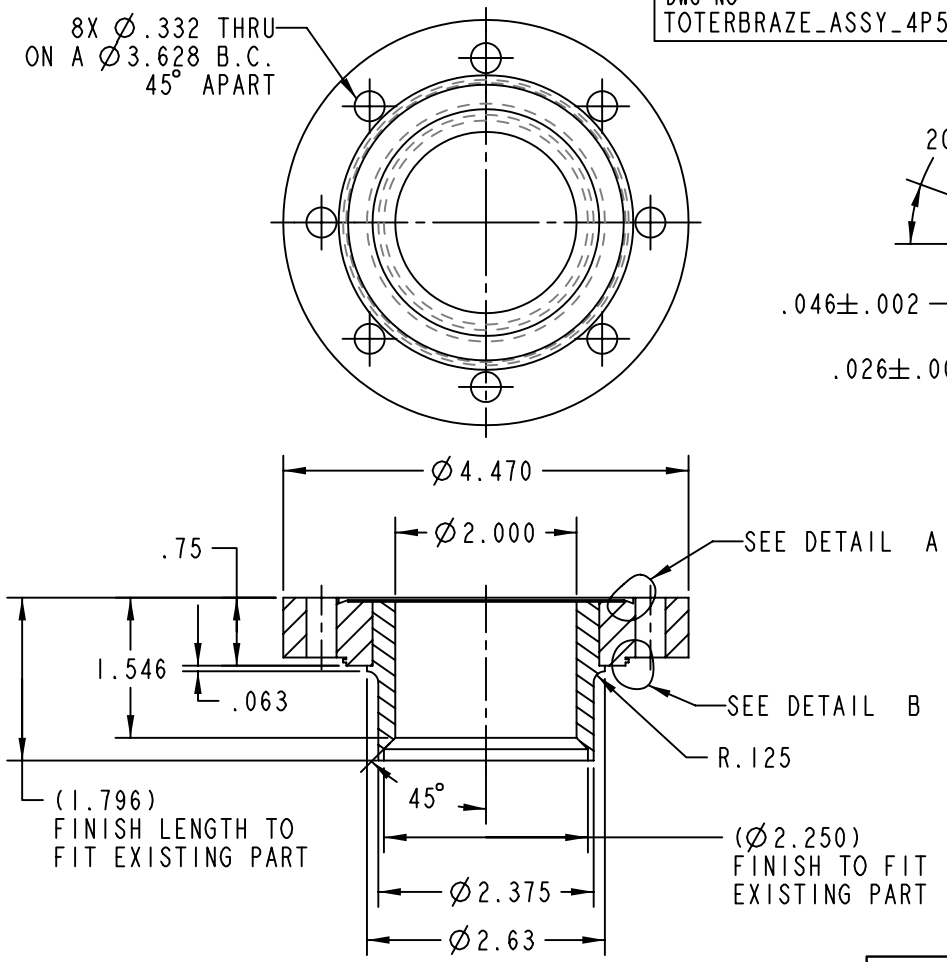

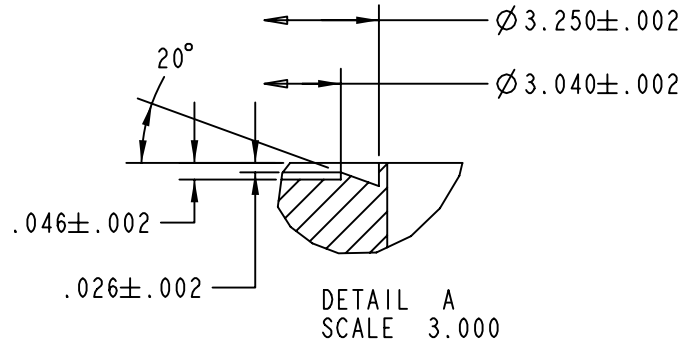

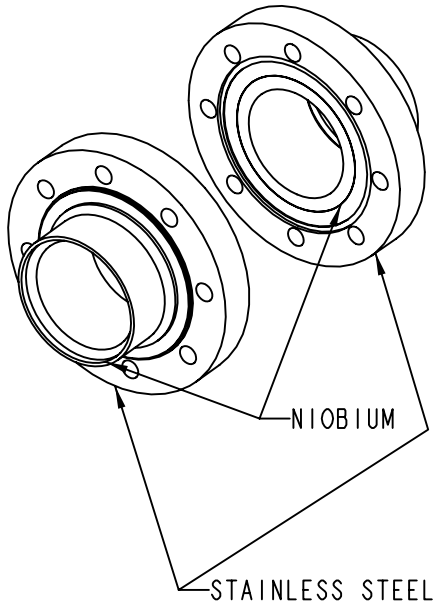

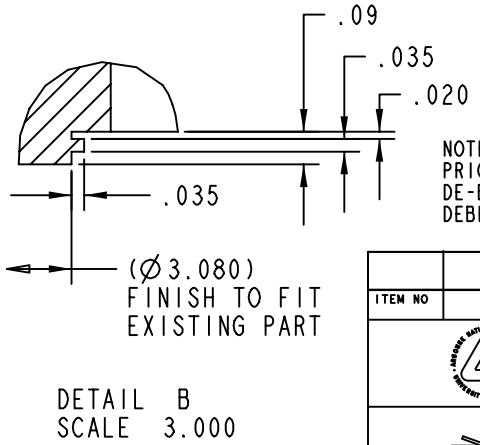

NOTE:
PRIOR TO DELIVERY, PART SHALL BE COMPLETELY DE-BURRED, CLEANED AND FREE FROM ALL FOREIGN DEBRIS (DIRT, DUST AND OILS ECT.)

ITEM NO	NEXT ASSEMBLY	REQD
		1

THIS DRAWING IS THE PROPERTY OF
ARGONNE NATIONAL LABORATORY

RIA Rare Isotope Accelerator

SYM	CHANGE	BY	CHKD	DATE	APVD	DATE

MICRO-FILMED DATE

UNLESS OTHERWISE NOTED
ALL DIMENSIONS ARE INCHES
DECIMAL TOLERANCE
.X ± .1
.XX ± .02
.XXX ± .005
ANGULAR TOL ± 1/2°
FRACTIONAL TOL ±1/64
REMOVE ALL BURRS AND SHARP EDGES
SURFACES TO BE IN ACCORDANCE WITH LATEST ANSI B46.1
DIMENSIONS & TOLERANCES IN ACCORDANCE WITH LATEST ASME Y14.5M

RECORD NUMBER

DRAWN BY	DATE	GP LEADER	DATE
DON GHILARDI	02/24/03		
CHECKED		PROJECT MGR	
RESPONSIBLE ENGINEER: JOEL FUERST		APVD/RELEASED	

MATERIAL

TITLE
4-1/2" CF BRAZE ASSY

SCALE	SHEET	DRAWING NUMBER	REV
0.750	1 OF 1	TOTERBRAZE_ASSY_4P5CF	+