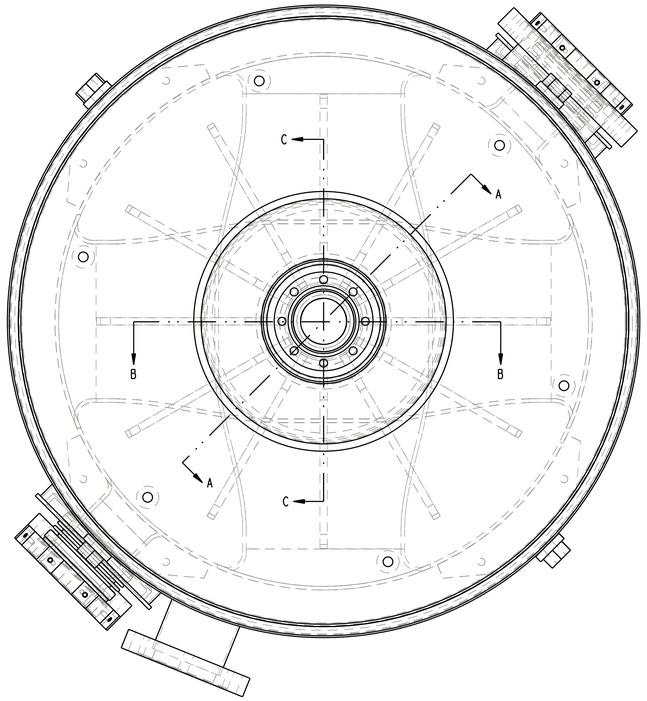

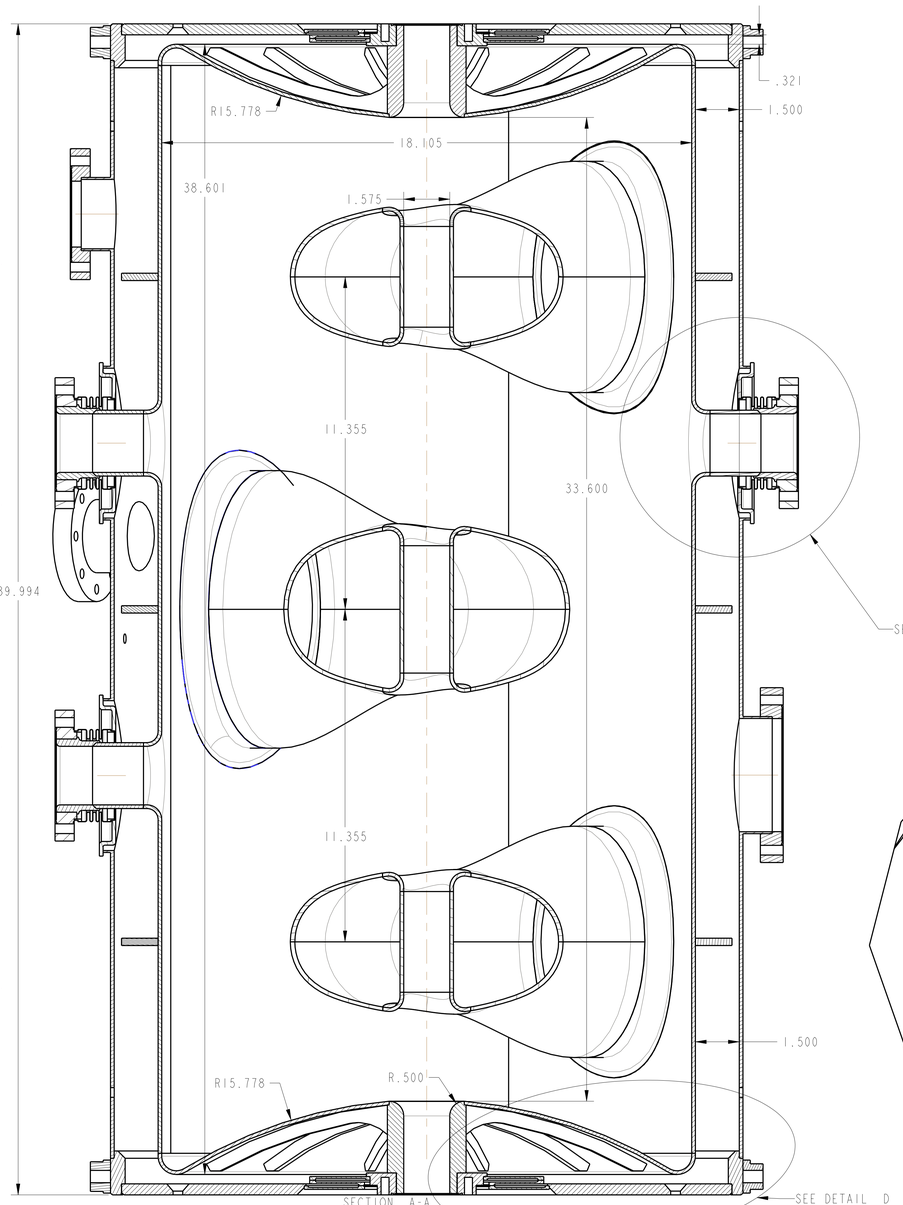

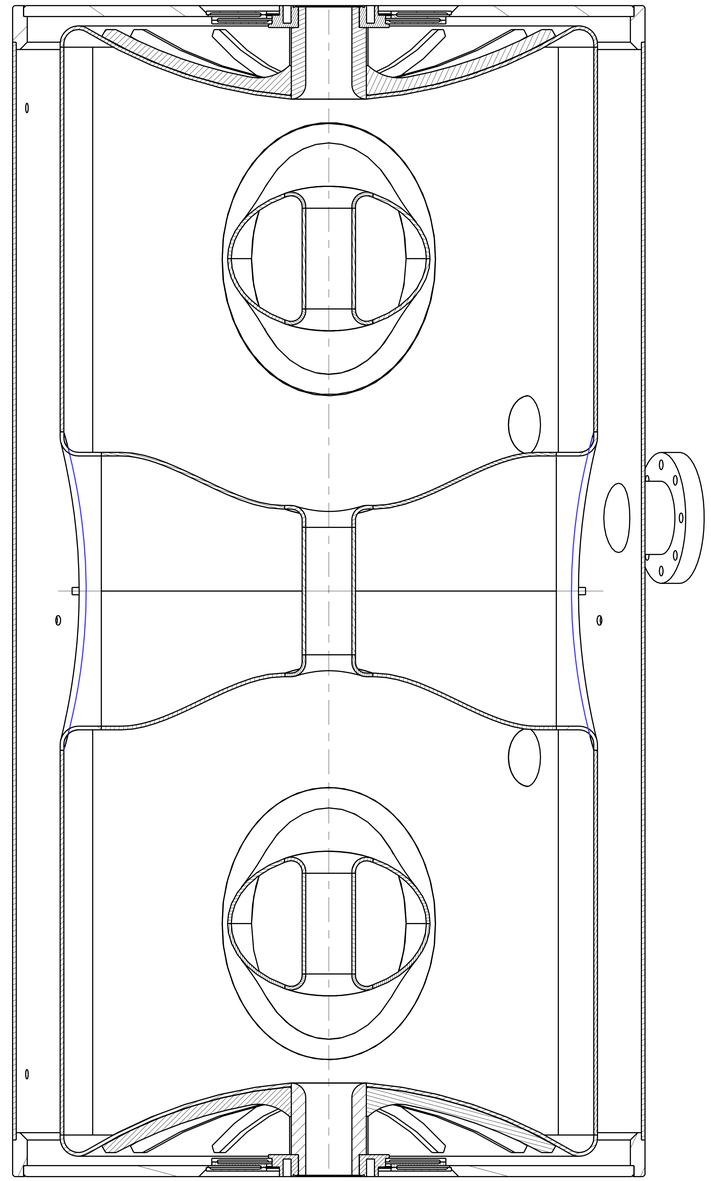

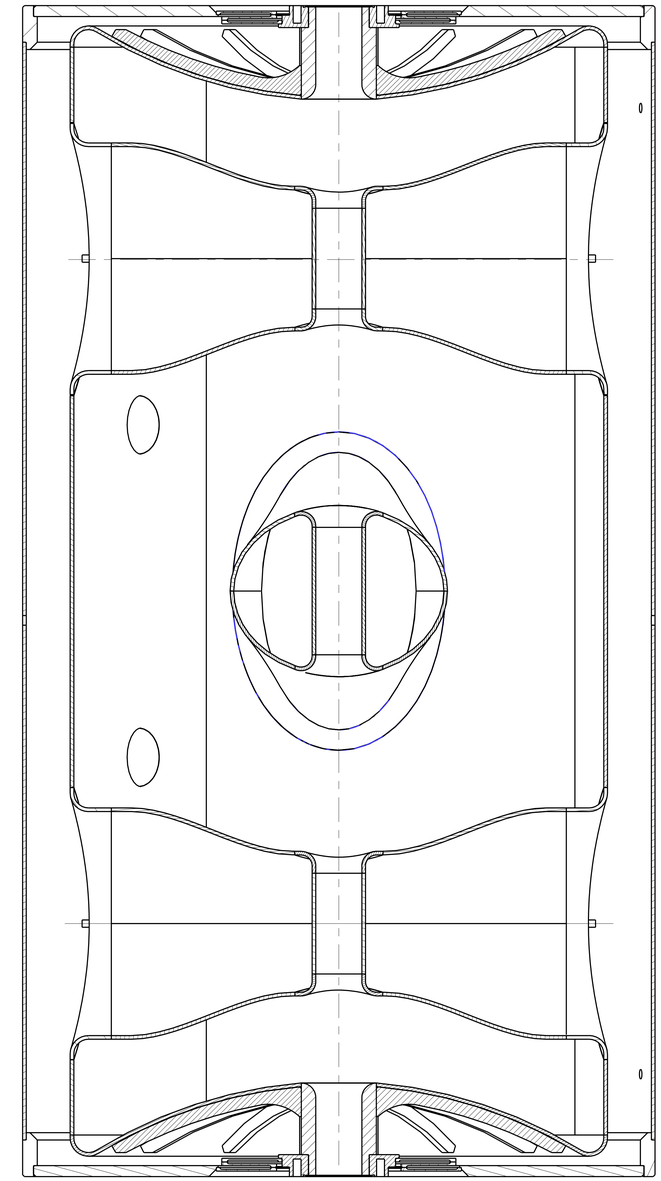

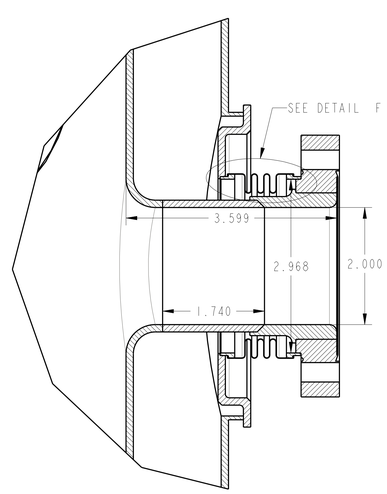

DETAIL E
SCALE 1.000

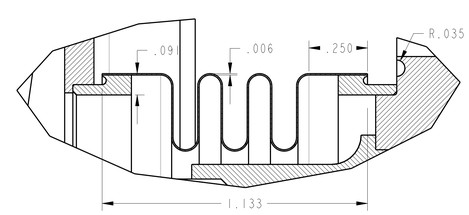

DETAIL F
SCALE 4.000

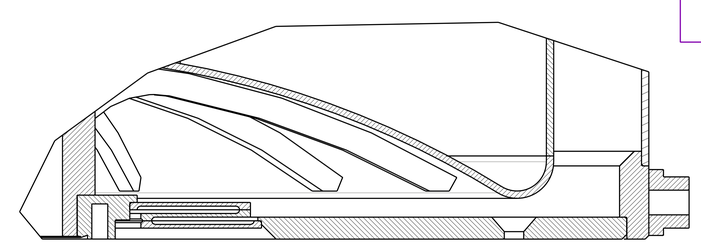

DETAIL D
SCALE 1.000

DWG NO
GI3393

ITEM NO	NEXT ASSEMBLY	REQD

THIS DRAWING IS THE PROPERTY OF
ARGONNE NATIONAL LABORATORY

Rare Isotope Accelerator

SYM	CHANGE	BY	CHKD	DATE	APVD	DATE

MICRO-FILMED DATE

UNLESS OTHERWISE NOTED
ALL DIMENSIONS ARE INCHES
DECIMAL TOLERANCE
.X ± .1
.XX ± .02
.XXX ± .005
ANGULAR TOL ± 1/2°
FRACTIONAL TOL ± 1/64
REMOVE ALL BURRS AND SHARP EDGES
SURFACES TO BE IN ACCORDANCE
WITH LATEST ANSI B46.1
DIMENSIONS & TOLERANCES IN
ACCORDANCE WITH LATEST ASME Y14.5M

REFERENCE NUMBER

DRAWN BY	DATE 14-Jul-03	GP LEADER	DATE
CHECKED		PROJECT MGR	
RESPONSIBLE ENGINEER		APVD/RELEASED	
MATERIAL			

TITLE
3 SPOKE
BETA 0.62

SCALE	SHEET	DRAWING NUMBER	REV
0.500	1 of 1	GI3393	000