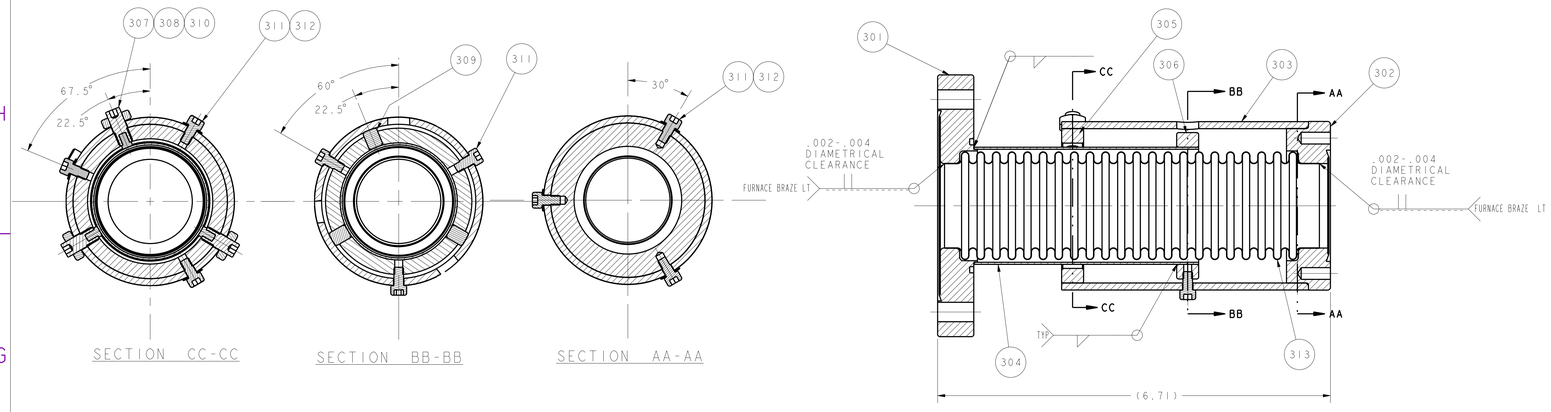

SUB ASSEMBLY 3

ITEM NO	REV	DRAWING NUMBER	PART NAME OR DESCRIPTION	PURCHASE PARTS MATERIAL	REQ'D
301	0	G13142__	4 1/2 OD CF FLANGE (MODIFIED)		1
302	0	G13143__	PL 2.88 OD x .625 THK		1
303	0	G13144_	BELLOWS CAN INSIDE		1
304	0	G13145_	BELLOWS CAN INNER		1
305	0	G13146__	COUPLER RING SCREWED		1
306	0	G13147__	COUPLER RING WELDED		1
307	0	G13148__	SOCKET SET SCREW SILICON BRONZE (BY ANL) (MODIFIED)		3
308	0	G13149__	VESPEL BUTTON - 2 (BY ANL) MODIFIED		3
309	0	G13150__	VESPEL BUTTON (BY ANL) MODIFIED		3
310	0		JAM HEX NUT 1/4-28 UNF McMASTER # 91847A429		3
311	0		SHDCS #8-32 UNC x 5/16 LG SILICON BRONZE (BY ANL)		9
312	0		BELLEVILLE DISC SPRING WASHER FOR #8 BOLT - McMASTER # 9713K58		6
313	0	G13411__	HYSPAN BELLOWS ASSEMBLY PN-7521D-6.0-0.5 (BY ANL) MODIFIED		1

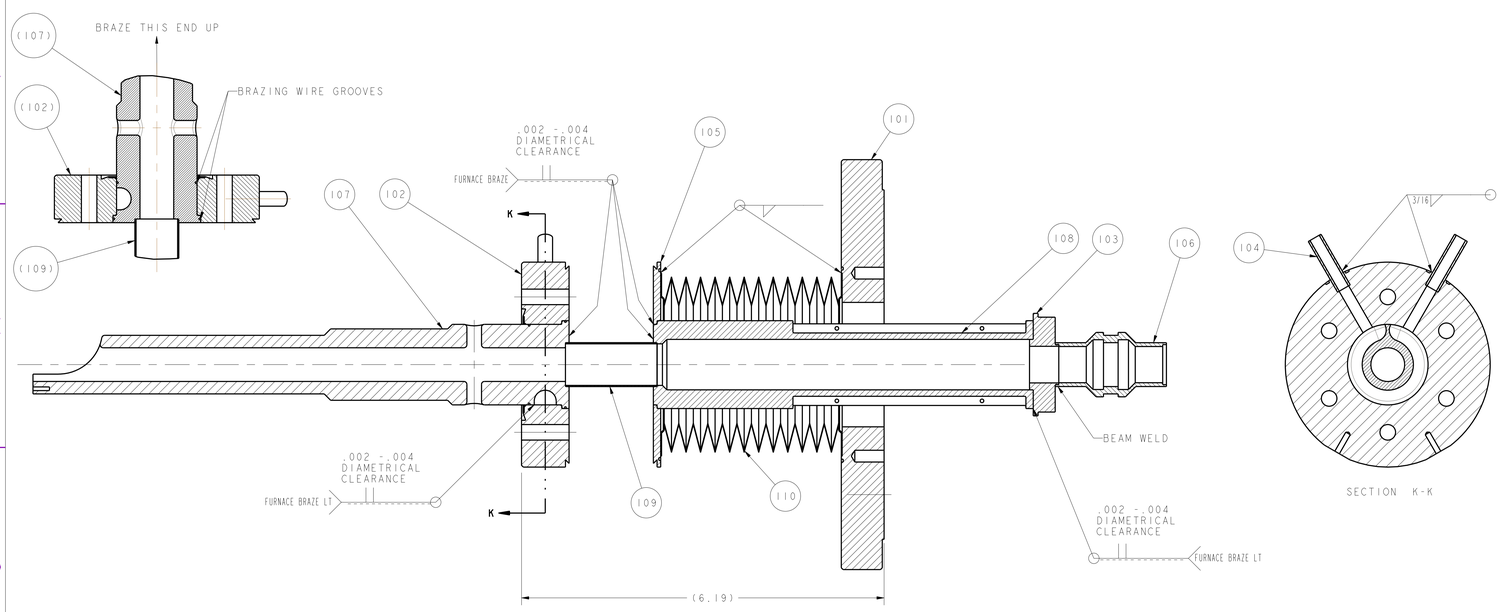

SUB ASSEMBLY 1

ITEM NO	REV	DRAWING NUMBER	PART NAME OR DESCRIPTION	PURCHASE PARTS MATERIAL	REQ'D
101	0	G13129__	END FLANGE		1
102	0	G13130__	PL 3.50 OD x 7/8" THK		1
103	0	G13131__	TRANSITION FLANGE		1
104	0		1/4" OD X .035 WALL TUBE 1" LG 304 SST		2
105	0	G13133__	TRANS PUP -2		1
106	0		CERAMASEAL FEEDTHRU 9998-06-W (BY ANL)		1
107	0	G13135__	PROBE SLEEVE (GLID COP)		1
108	0	G13136__	GLID COP TUBE		1
109	0	G13137__	TRANSITION PUP (BY ANL) MODIFIED		1
110	0		METAL FLEX BELLOWS PN-30020FF-4.5 (BY ANL)		1

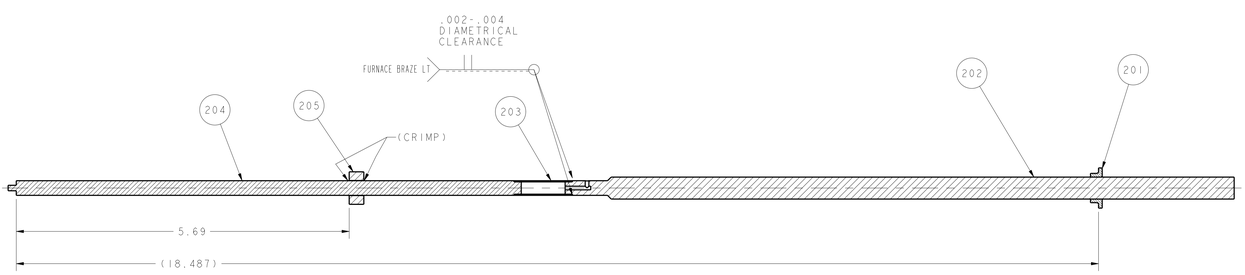

SUB ASSEMBLY 2

ITEM NO	REV	DRAWING NUMBER	PART NAME OR DESCRIPTION	PURCHASE PARTS MATERIAL	REQ'D
201	0	G13419	FEEDTHRU TRANSITION PIECE		1
202	0	G13138__	ANTENNA PIECE 1		1
203	0	G13139__	HEAT LINK (BY ANL) MODIFIED		1
204	0	G13140___	ANTENNA PIECE 2		1
205	0	G13141__	SAPHIRE BEARING, (BY ANL) MODIFIED		1

DWG NO G12935_4

NOTE:

ALL VIEWS SHOWN WITH BELLOWS IN NEUTRAL POSITION

SYM	CHANGE	BY	CHKD	DATE	APVD	DATE

MICRO-FILMED DATE

UNLESS OTHERWISE NOTED
ALL DIMENSIONS ARE INCHES
DECIMAL TOLERANCE
.X ± .1
.XX ± .02
.XXX ± .005
ANGULAR TOL ± 1/2°
FRACTIONAL TOL ± 1/64
REMOVE ALL BURRS AND SHARP EDGES SURFACES TO BE 16 IN ACCORDANCE WITH LATEST ANSI B46.1
DIMENSIONS & TOLERANCES IN ACCORDANCE WITH LATEST ASME Y14.5M

REFERENCE NUMBER	G12935_4		
DRAWN BY JON GHILARDI	DATE 5/3/04	GP LEADER	DATE
CHECKED		PROJECT MGR KEN SHEPARD	
RESPONSIBLE ENGINEER JOEL FUERST		APVD/RELEASED	
MATERIAL SEE PART DRAWINGS			

ITEM NO	G12916	REQD 1
NEXT ASSEMBLY		

THIS DRAWING IS THE PROPERTY OF
ARGONNE NATIONAL LABORATORY

Rare Isotope Accelerator

TITLE
RIA RESONATOR
COUPLER ASSEMBLY
MOD 4
5/24/04

SCALE	SHEET	DRAWING NUMBER	REV
1.000	2 of 2	G12935_4	1