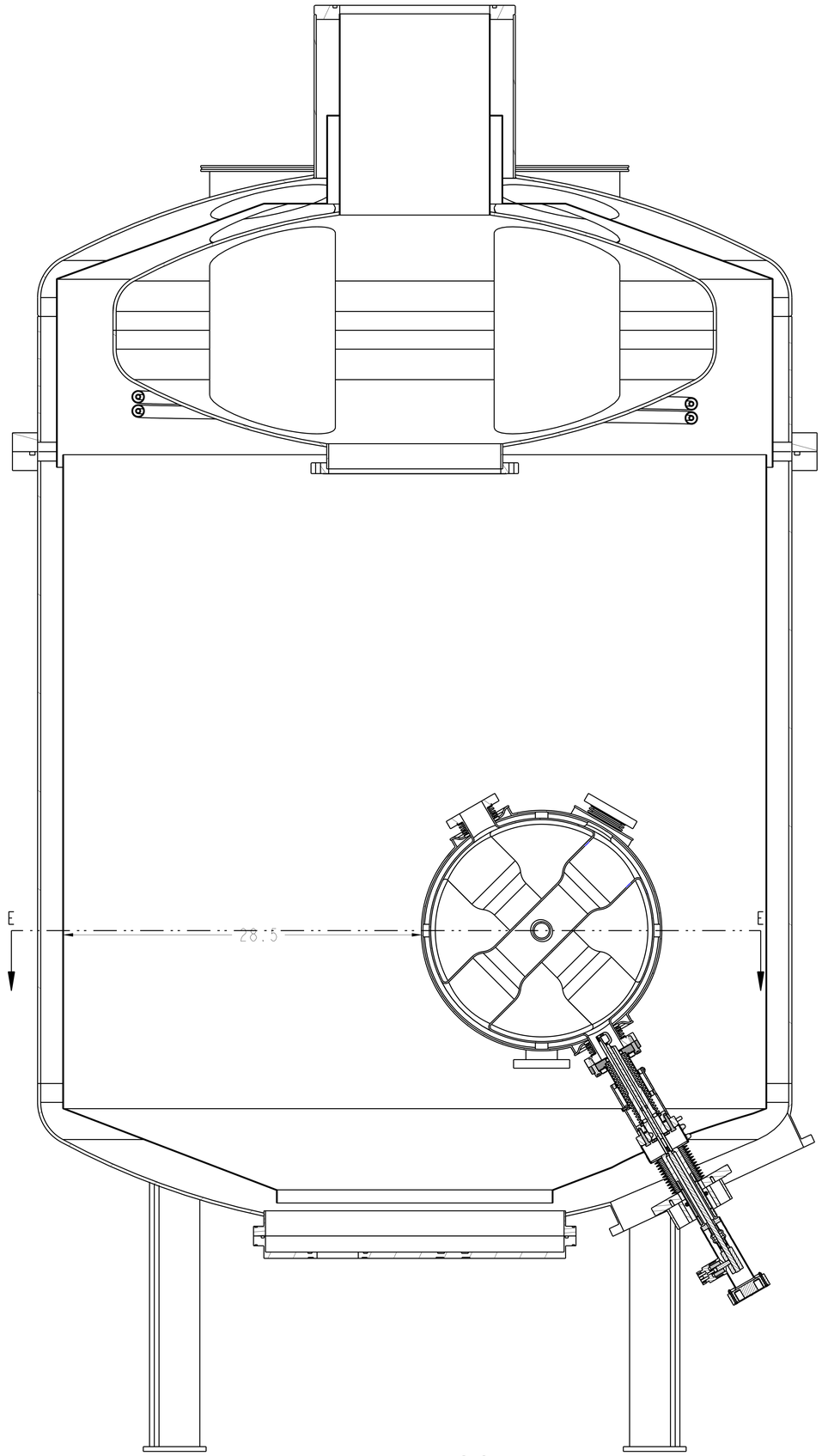

SECTION D-D

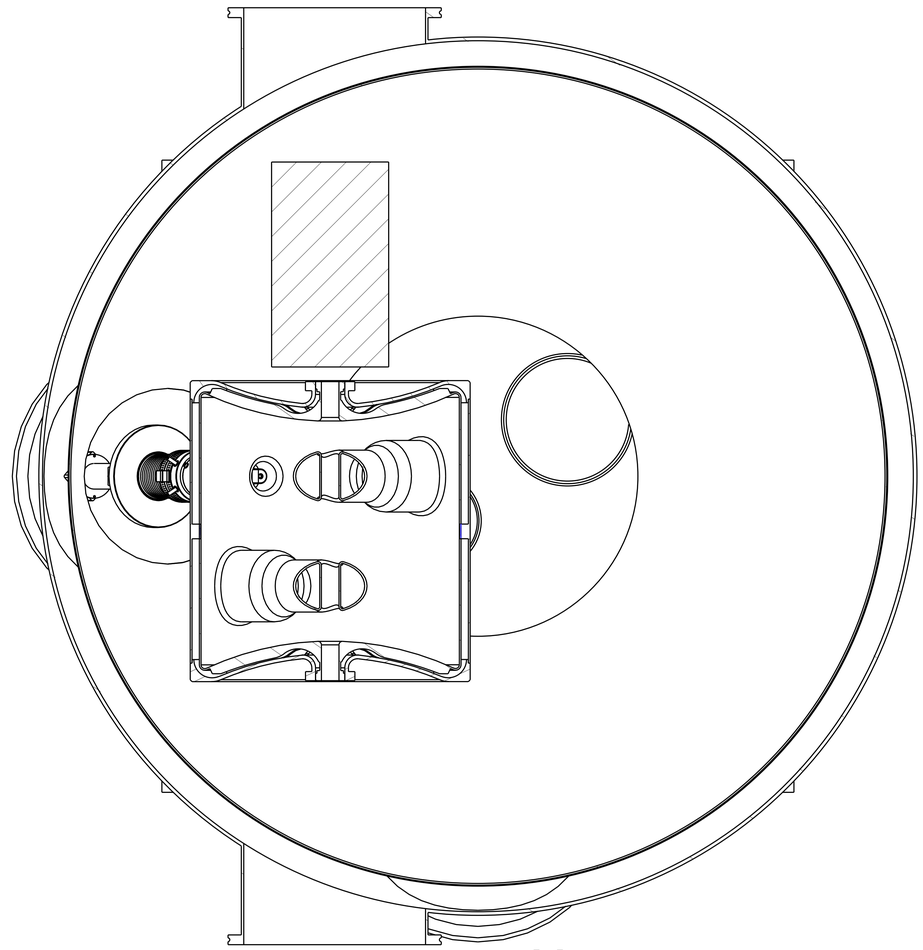

SECTION E-E

DWG NO
GI3549

ITEM NO	NEXT ASSEMBLY	REQD

THIS DRAWING IS THE PROPERTY OF
ARGONNE NATIONAL LABORATORY

Rare Isotope Accelerator

SYM	CHANGE	BY	CHKD	DATE	APVD	DATE

MICRO-FILMED DATE

UNLESS OTHERWISE NOTED
ALL DIMENSIONS ARE INCHES
DECIMAL TOLERANCE
.X ± .1
.XX ± .02
.XXX ± .005
ANGULAR TOL ± 1/2°
FRACTIONAL TOL ± 1/64
REMOVE ALL BURRS AND SHARP EDGES
SURFACES TO BE IN ACCORDANCE
WITH LATEST ANSI B46.1
DIMENSIONS & TOLERANCES IN
ACCORDANCE WITH LATEST ASME Y14.5M

REFERENCE NUMBER

DRAWN BY	DATE	GP LEADER	DATE
DON GHILARDI	27-Apr-05		
CHECKED		PROJECT MGR	
RESPONSIBLE ENGINEER		APVD/RELEASED	
MATERIAL			

TITLE

SCALE	SHEET	DRAWING NUMBER	REV
:4[.3]	5 or 5	GI3549	00.11+