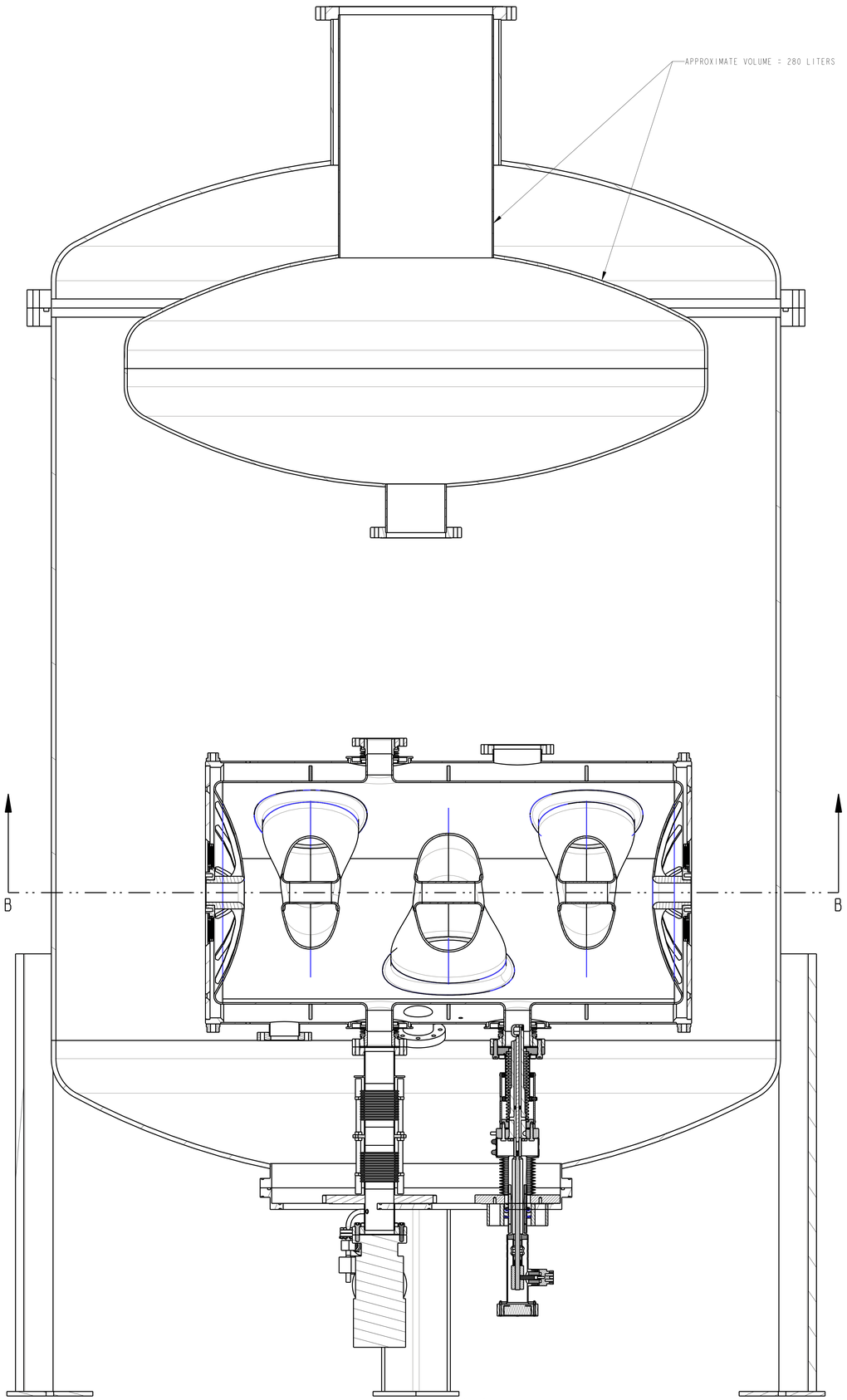

SECTION A-A

NOTE:
Subsystems not included in this preliminary conceptual layout:

- magnetic shield
- thermal shield w/LN2 trace tubing & connections
- multi-layer insulation
- dewar neck insert w/bayonets, He relief, instr. ports, etc.
- JT valve and heat exchanger for 2K operation

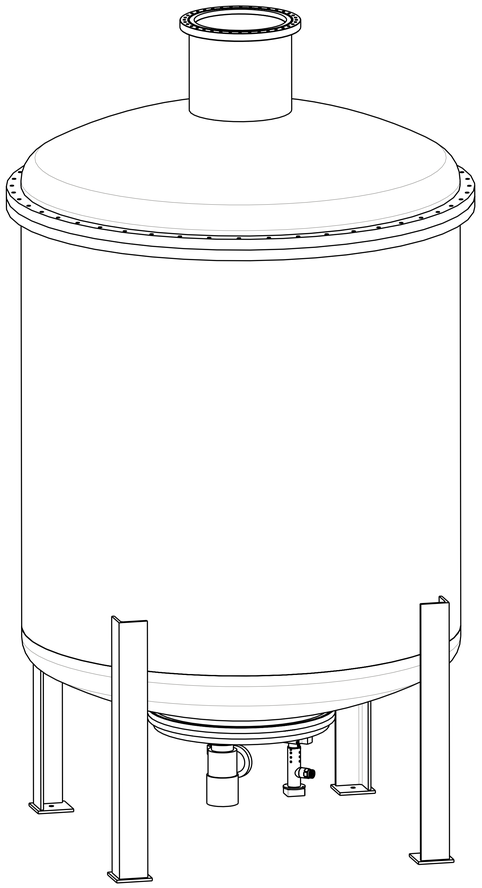

SCALE 1:8

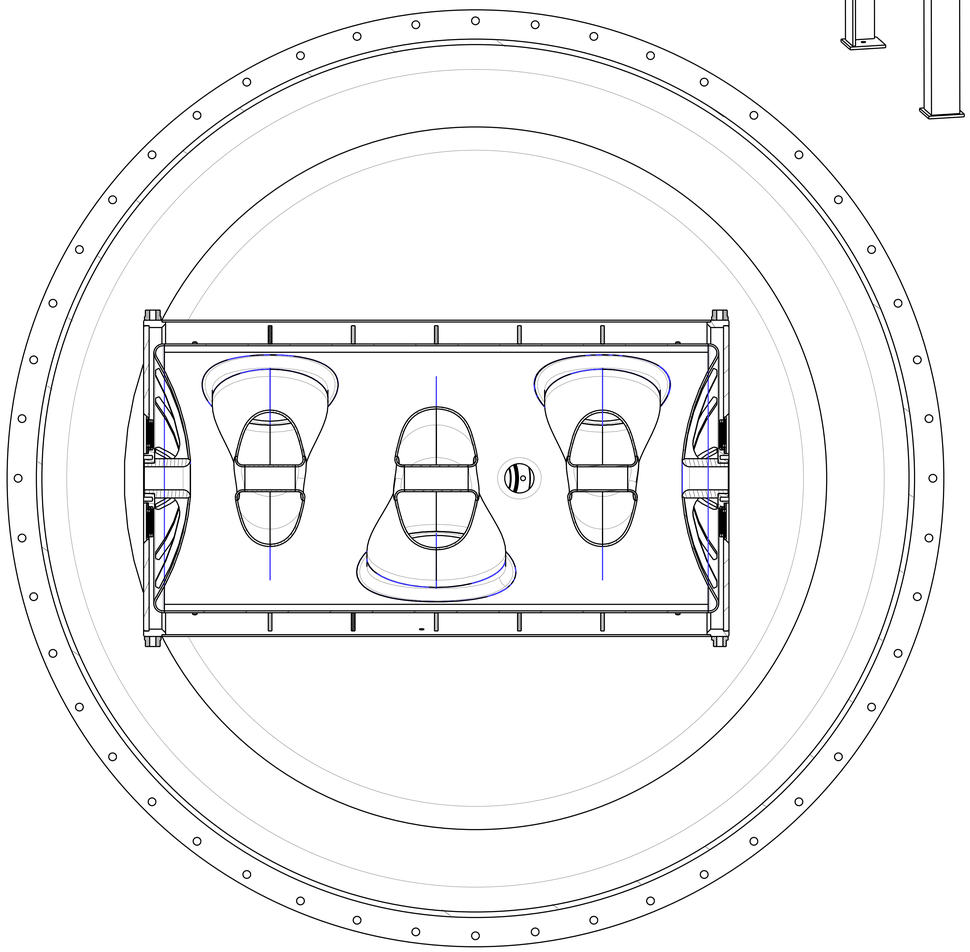

SECTION B-B

DWG NO G13549

ITEM NO	NEXT ASSEMBLY	REQD

THIS DRAWING IS THE PROPERTY OF
ARGONNE NATIONAL LABORATORY

Rare Isotope Accelerator

TITLE

REFERENCE NUMBER

DRAWN BY	DATE	GP LEADER	DATE
DON GHILARDI	20-Oct-09		
CHECKED		PROJECT MGR	
RESPONSIBLE ENGINEER		APVD/RELEASED	
MATERIAL			

UNLESS OTHERWISE NOTED
ALL DIMENSIONS ARE INCHES
DECIMAL TOLERANCE
.X ± .1
.XX ± .02
.XXX ± .005
ANGULAR TOL ± 1/2°
FRACTIONAL TOL ± 1/64
REMOVE ALL BURRS AND SHARP EDGES
SURFACES TO BE IN ACCORDANCE
WITH LATEST ANSI B96.1.
DIMENSIONS & TOLERANCES IN
ACCORDANCE WITH LATEST ASME Y14.5M

SYM	CHANGE	BY	CHKD	DATE	APVD	DATE

MICRO-FILMED DATE

SCALE	SHEET	DRAWING NUMBER	REV
:4(.3)	4 or 4	G13549	00.4+