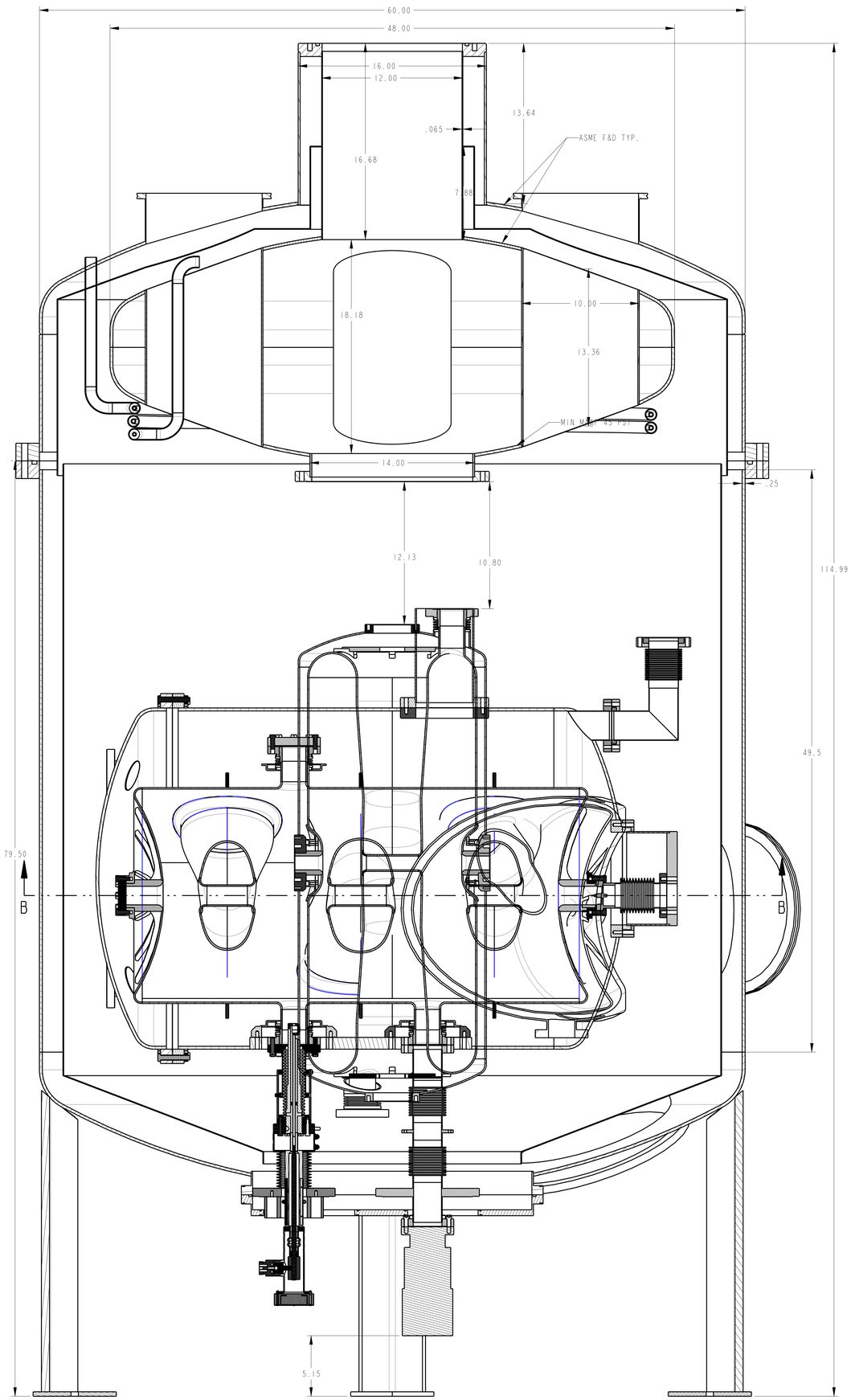

SECTION A-A

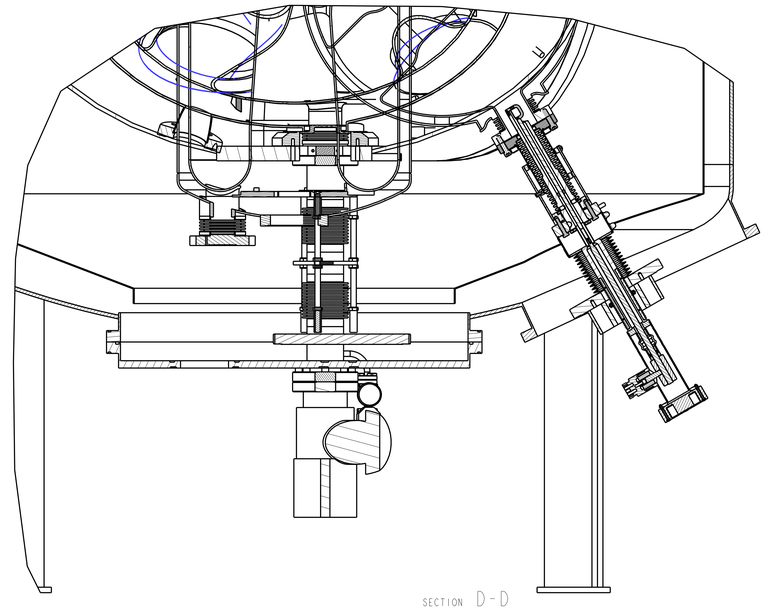

SECTION D-D

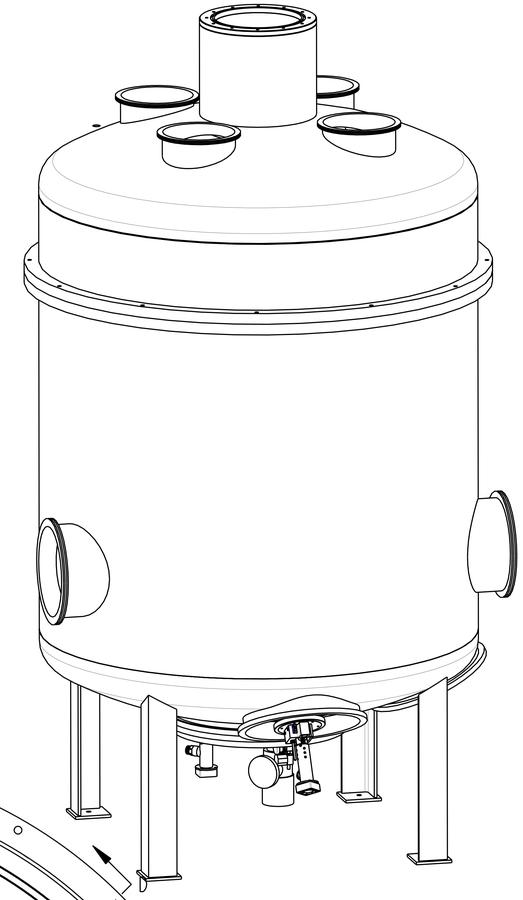

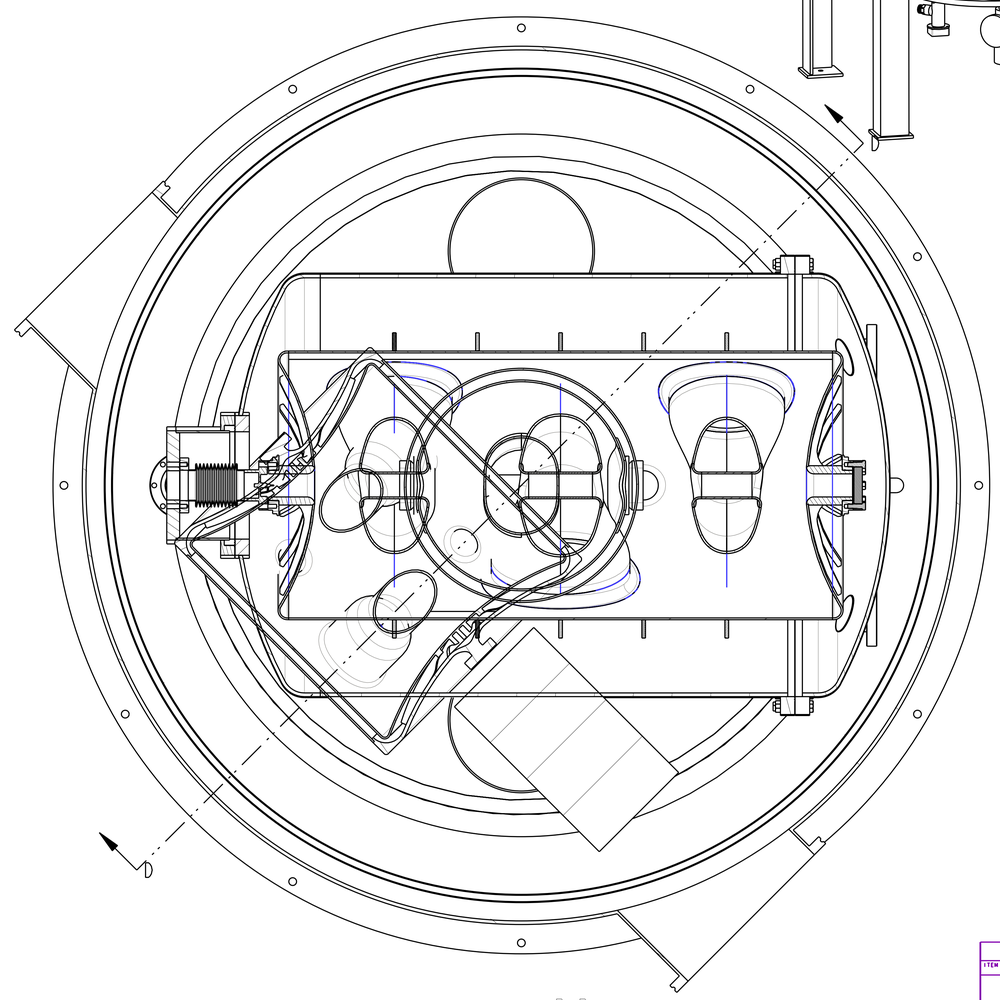

SECTION B-B

DWG NO
GI3549

ITEM NO	NEXT ASSEMBLY	REQD

THIS DRAWING IS THE PROPERTY OF
ARGONNE NATIONAL LABORATORY

Rare Isotope Accelerator

REFERENCE NUMBER			
DRAWN BY: DON GRILLARDI	DATE: 19-Oct-99	GP LEADER	DATE
CHECKED		PROJECT MGR	
RESPONSIBLE ENGINEER		APVD/RELEASED	
MATERIAL			

TITLE
RIA
CAVITY TEST VESSEL

SCALE	SHEET	DRAWING NUMBER	REV
1:4	1 of 5	GI3549	00.1A

SYM	CHANGE	BY	CHKD	DATE	APVD	DATE

MICRO-FILMED DATE

UNLESS OTHERWISE NOTED
ALL DIMENSIONS ARE INCHES
DECIMAL TOLERANCE
.X ± .1
.XX ± .02
.XXX ± .005
ANGULAR TOL ± 1/2°
FRACTIONAL TOL ± 1/64
REMOVE ALL BURRS AND SHARP EDGES
SURFACES TO BE IN ACCORDANCE
WITH LATEST ANSI B46.1
WELDS TO BE FINISHED IN
ACCORDANCE WITH LATEST ASME Y14.5M