SNS Superconducting Linac RF Control System Overview

Workshop on Low-Level RF Controls For Superconducting Linacs

Jefferson Lab, Newport News, VA

April 25-27, 2001

Amy Regan

LANL RF Controls Team:

Irene DeBaca, Sung-il Kwon, Roy Lopez, Mark Prokop, Tony Rohlev, Dave Thomson, Yi-Ming Wang

SNS-104010302-DE0001-R00

SNS - Collaborative effort

- Accelerator-based neutron source for neutron scattering R&D

- LBL - Front End (injector, RFQ)
- LANL - NC Linac, all RF
- JLAB - SRF Cavity Systems and Cryomodules
- BNL - Accumulator Ring
- ORNL - Target, Overall Project Management
- ANL, ORNL - Instruments
- Controls - ORNL, LANL, LBNL, BNL

Linac for SNS

April, 2001

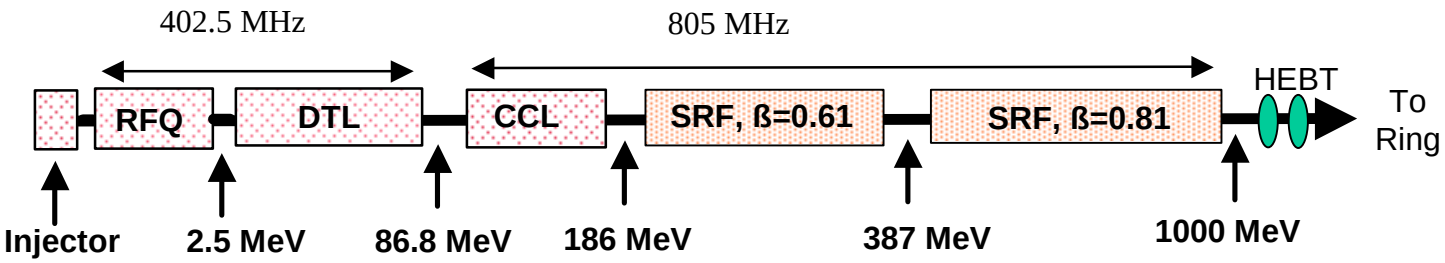

H- energy	**1000 MeV**
Beam power	**1.55 MW, avg.**
Average Current during pulse	**26 mA**
Pulse Width	**1 ms**
Rep Rate	**60 Hz**
Klystrons	
402.5 MHz, 2.5 MW pk	**7**
(includes 1 for RFQ, 6 for DTL)	
805 MHz, 5 MW pk	**6**
(includes 4 for CCL, 2 for HEBT)	
805 MHz, 0.55 MW pk, SRF	**81**
HV Systems	**1 for each 5 MW klystron or pair of 2.5 MW klystrons**
	except 1 for RFQ and first 2 DTL tanks and 1 for 2 HEBT cavities
	1 for 11 or 12 each 0.55 MW klystrons (15 total, plus 3 for test stands)
Total AC power for RF	**Less than 20 MW**

Layout of Linac RF with NC and SRF Modules

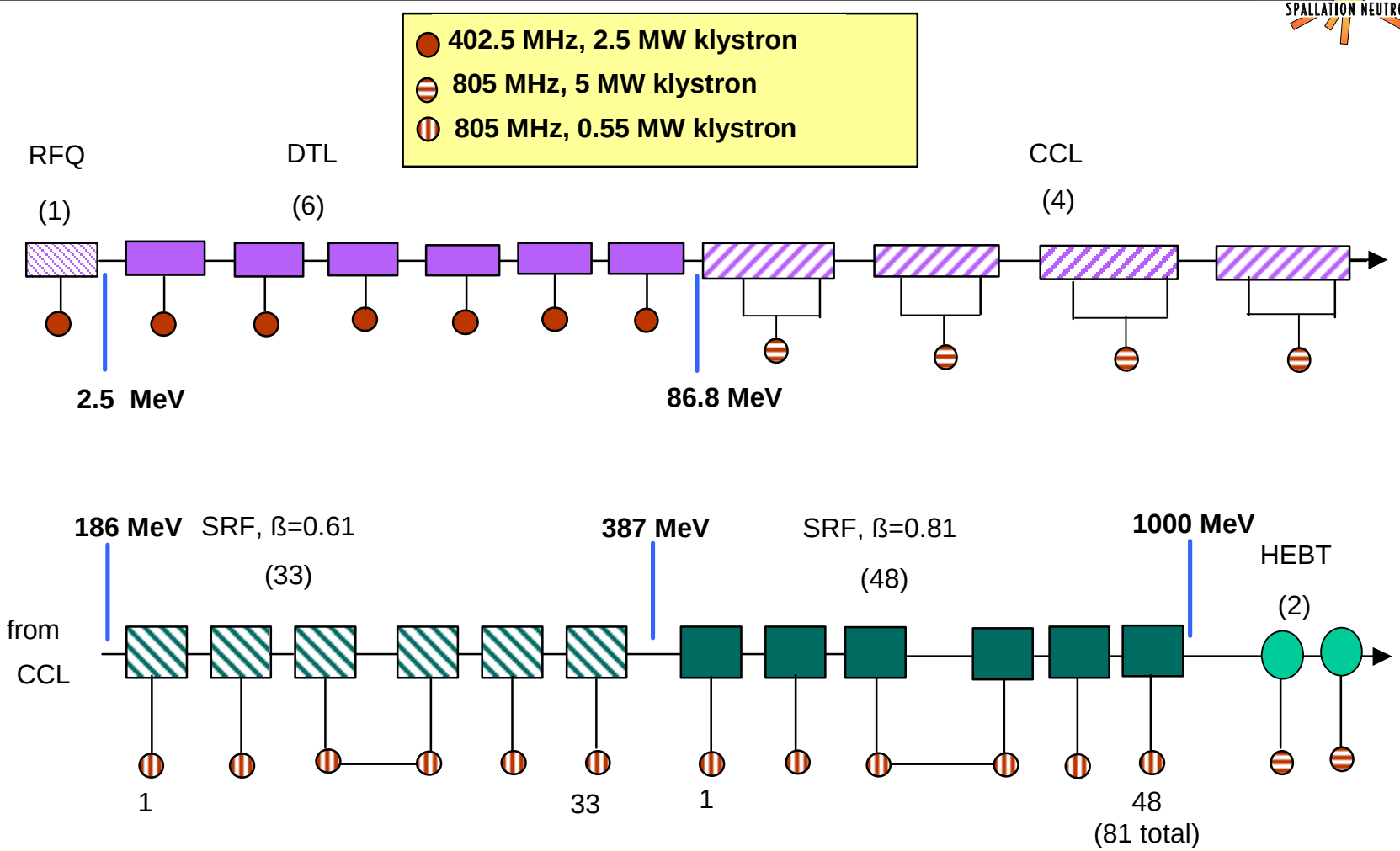

Klystron/HV Parameters for baseline design

Frequency (MHz)	Klystron power (MW)	Number of Klystrons	HV (kV)	Current (A)	Number of Klystrons per HV System
402.5	2.5	7	125	35	2
805	5	6	140	88	1
805	0.55	81	75	11.3	11 or 12*

*12 klystrons was set as the maximum number per power supply to avoid overly complicated HV distribution and monitoring as well as to mesh well with the transmitters. Some HV supplies only have 11 because of the total power required.

Klystron Specifications

Peak Power	2500 kW	5000 kW	550 kW
Test Power	2750 kW	5500 kW	605 kW
Frequency	402.5 MHz	805 MHz	805 MHz
Duty Factor	8%	8%	9%
Efficiency	58%	55%	65%
Beam Voltage Maximum	125 kV	140 kV	75 kV
Bandwidth (1 dB)	1.0 MHz	2.6 MHz	2.6 MHz
Height	13 feet	13.4 feet	9 feet

RF control system requirements drive design

REQUIRED FUNCTIONS

- Cavity Field Control
- Cavity Resonance Control
- RF Reference generation and distribution
- HPRF protection

SYSTEM CONFIGURATIONS

- NC: 2.5 MW klystron driving single cavity (402.5 MHz)
- NC: 5 MW klystron driving single cavity through a split (805 MHz)
- SC: 550 kW klystrons driving single cavities

ANTICIPATED OPERATIONAL & CONDITIONING SCENARIOS

- Pulsed beam, Pulsed RF
  - 60 Hz rep rate
  - 68% chopping, 36 mA avg

RF Control System Requirements

FIELD CONTROL ± 0.5% amplitude, ± 0.5° phase	per cavity 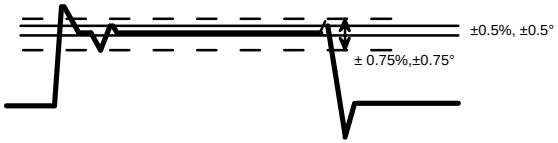	
RESONANCE CONTROL Maintain cavity resonance	***NC***	***SRF***
	402.5 MHz: RFQ f_0 ± 15 kHz (Q_L = 3300 BW = 122 kHz)	
	402.5 MHz: DTL f_0 ± 2 kHz (Q_L = 17,818 BW = 22.6 kHz)	805 MHz: med. ? f_0 ± 500 Hz (Q_L = 733,000 BW = 1 kHz)
	805 MHz: CCL f_0 ± 10 kHz (Q_L = 8108 (smallest bandwidth case) BW = 99.3 kHz)	805 MHz: high ? f_0 ± 500 Hz (Q_L = 699,000 BW = 1.1 kHz)

Error Allocation

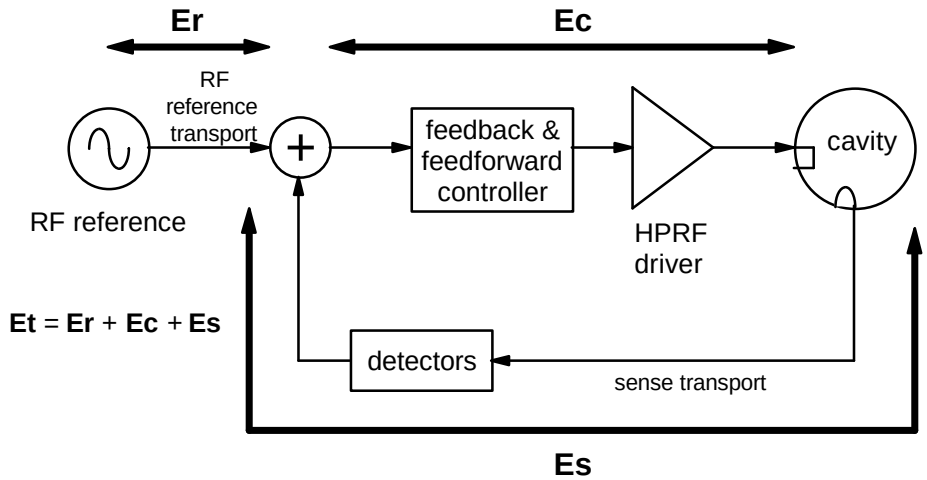

Er = reference line transport error
Ec = residual control loop error
Es = sense line and detection error
Et = total system error

PERFORMANCE OBJECTIVES
PEAK AMPLITUDE ERROR: ?0.5%
PEAK PHASE ERROR: ?0.5°

TOLERANCE BUDGET

	AMPLITUDE (%)	PHASE
Er	N/A	±0.15
Es	±0.2	±0.15
Ec	±0.3	±0.2

RFCS Functional Block Diagram

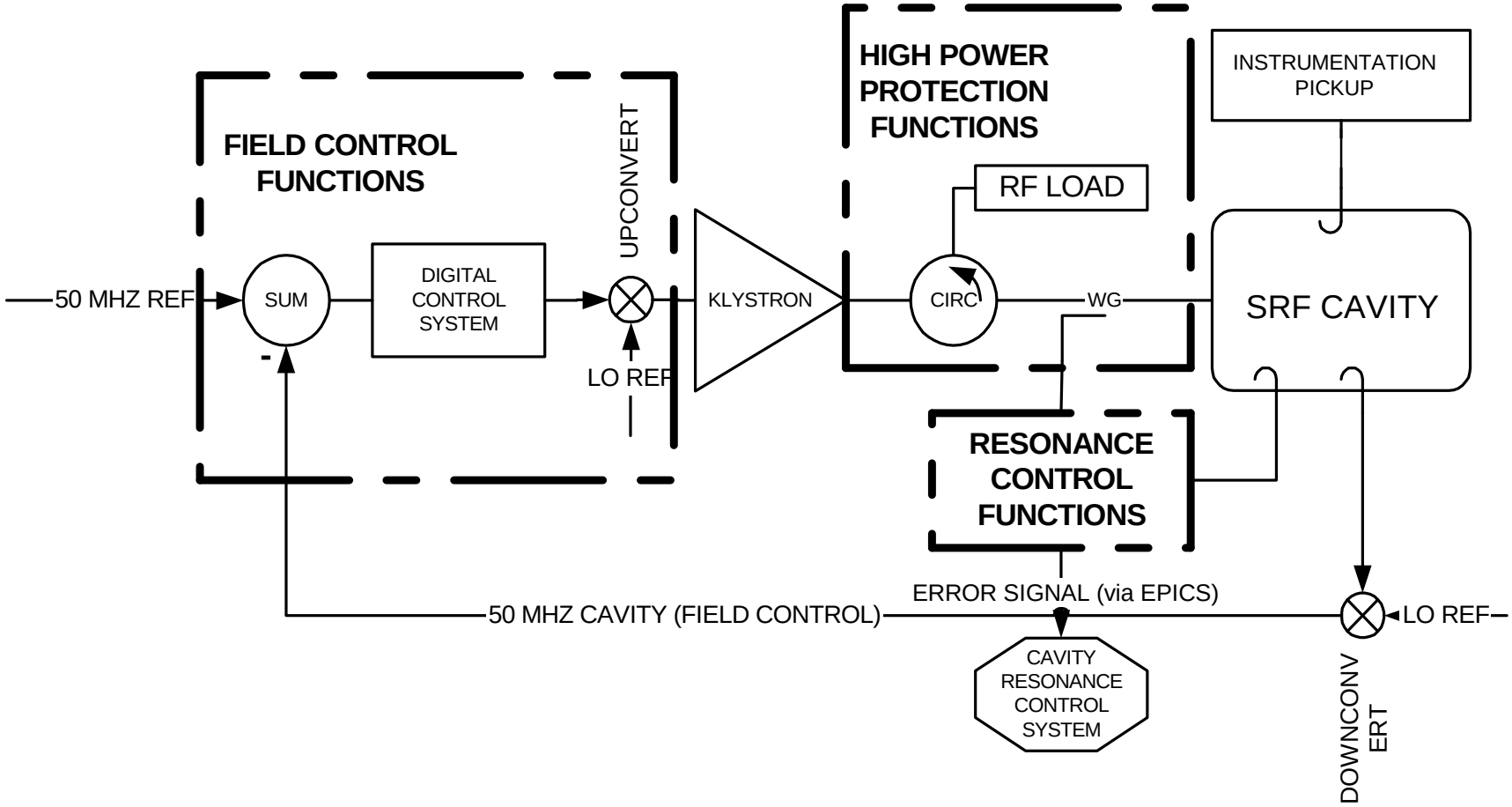

SRF RF Control System Architecture
2 systems / VXIbus crate

LANL-designed VXIbus module

Machine Protection System, Timing System, Real Time Data Link Interface Modules still to be defined

RF Daughter Card Layout

- 8 layer board

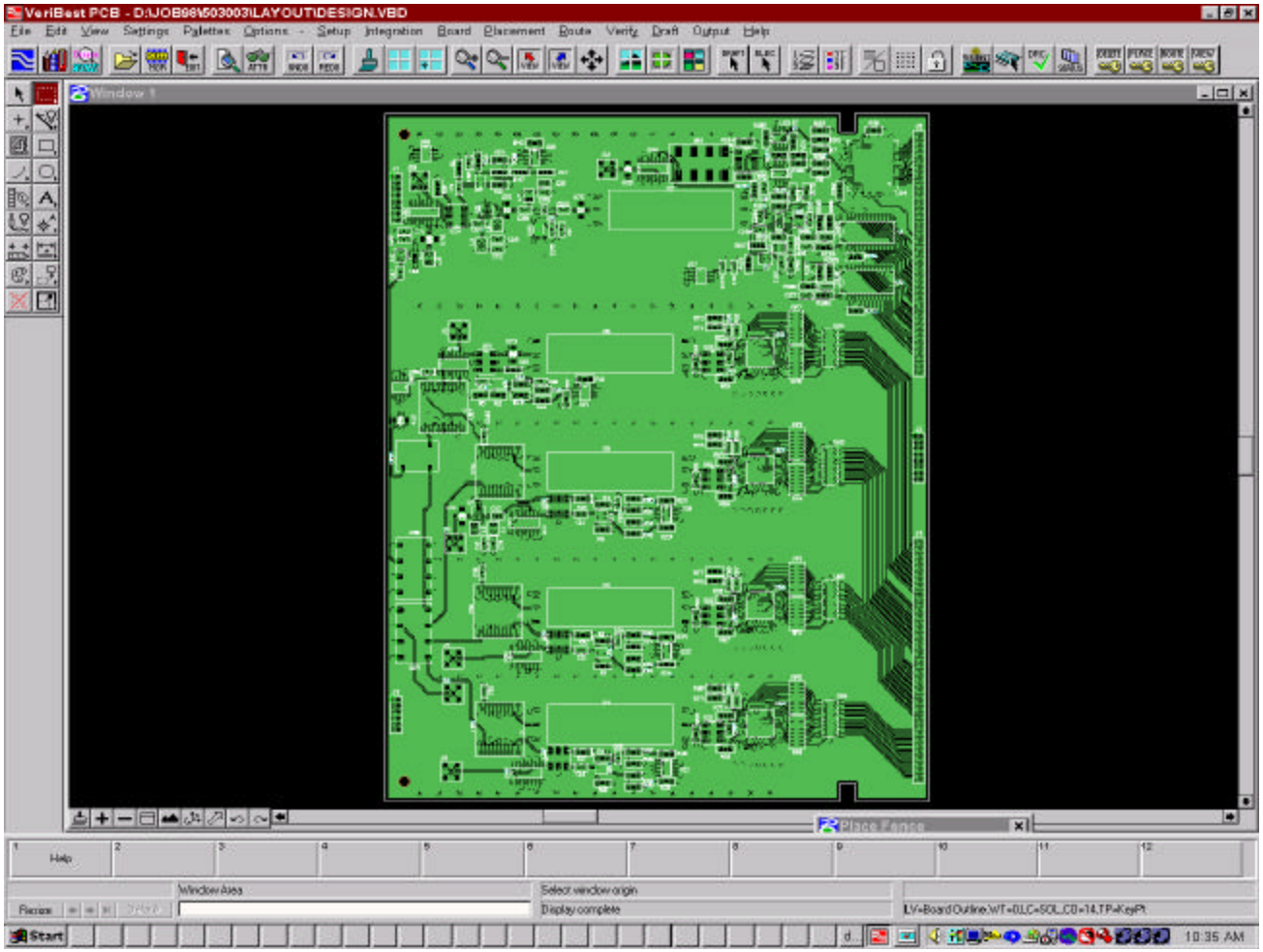

DSP daughter card layout

- 10 layer board

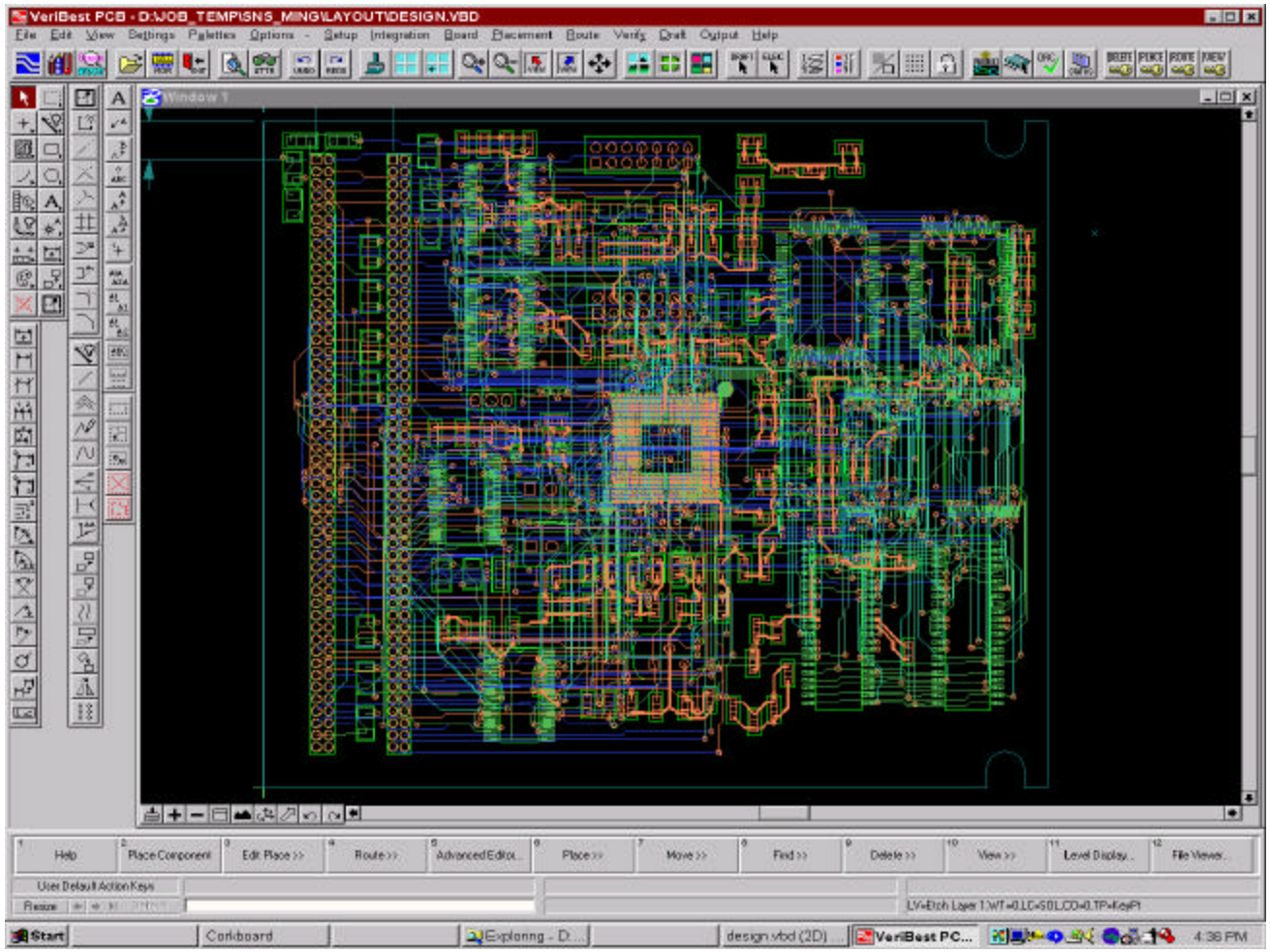

DSP daughter card
- close-up of DSP BGA

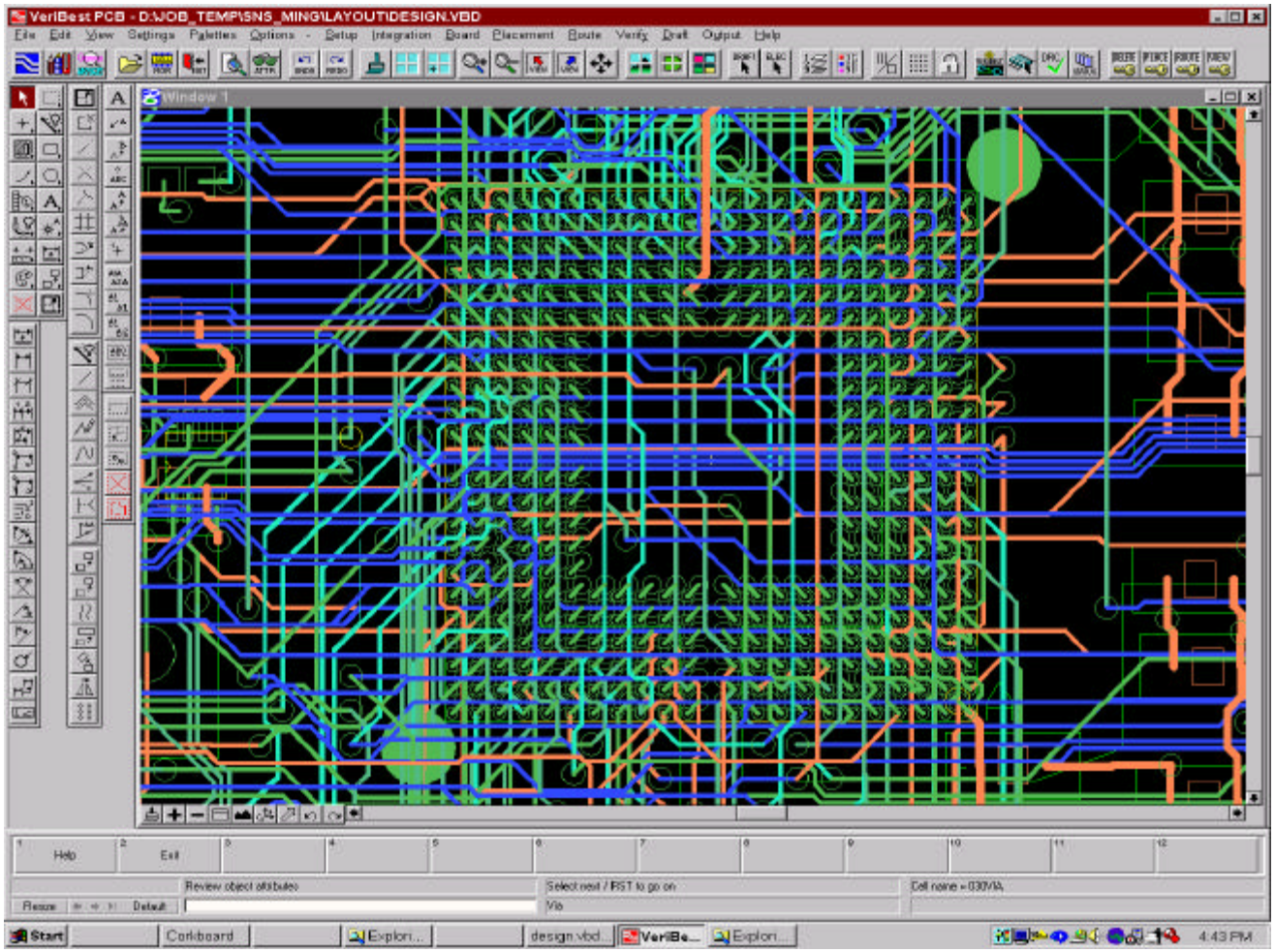

FRCM Motherboard population

(mostly. Still missing one 1000-pin CPLD (672's shown, two need to be replaced with 1020's)) - 16 layer board

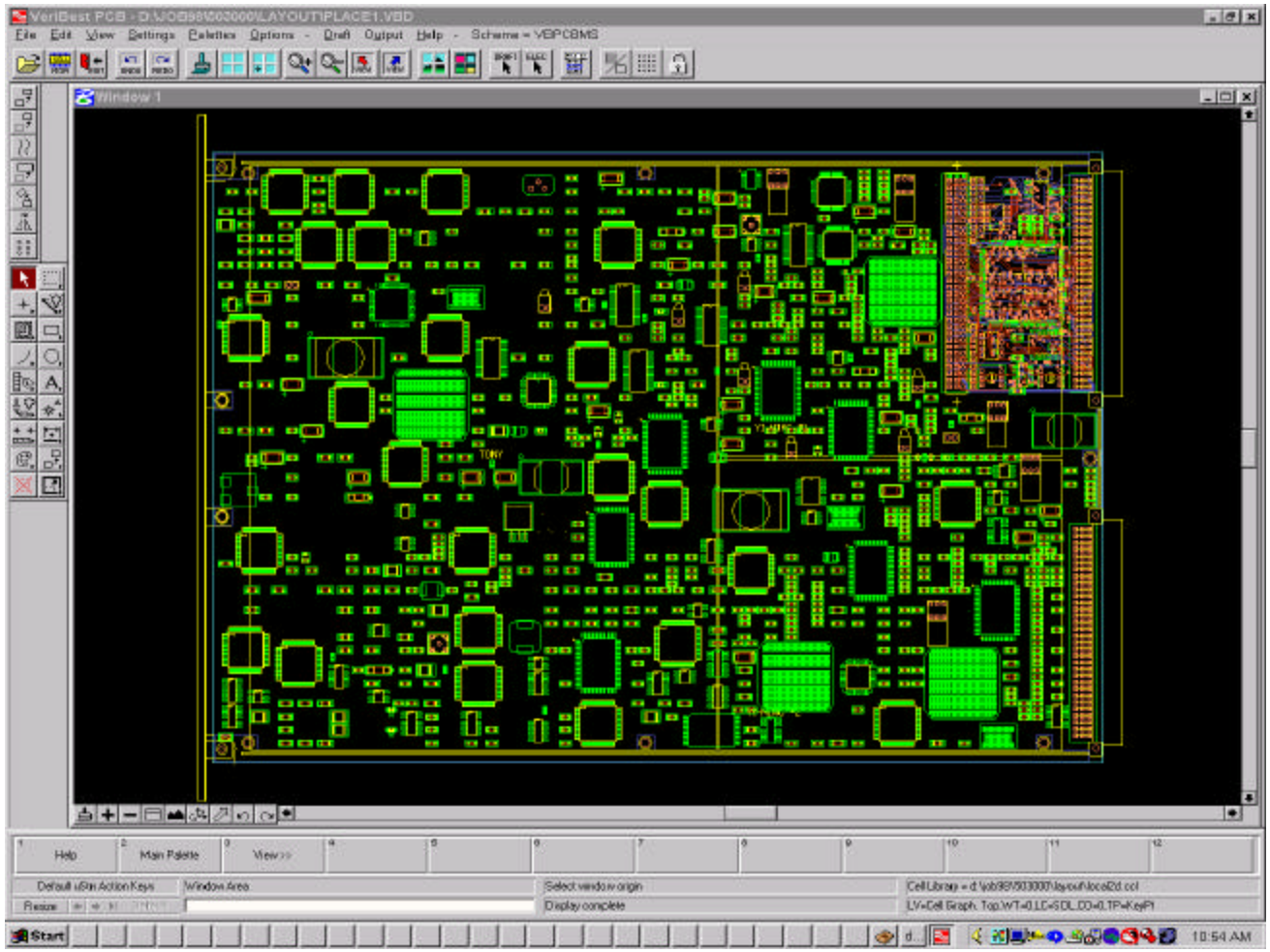

FRCM with populated daughter cards

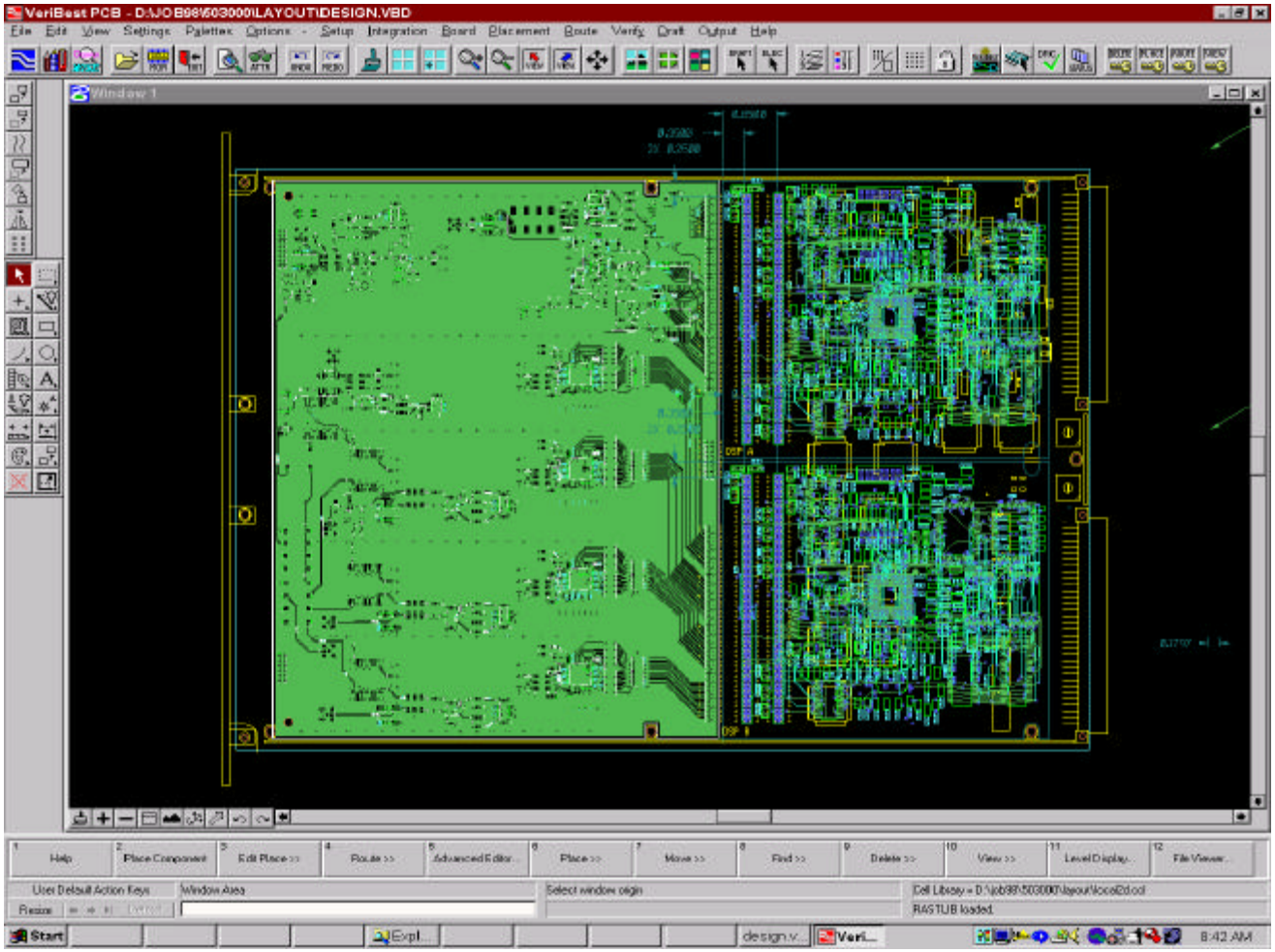

Most superconducting cavities will have more than the nominal power margin

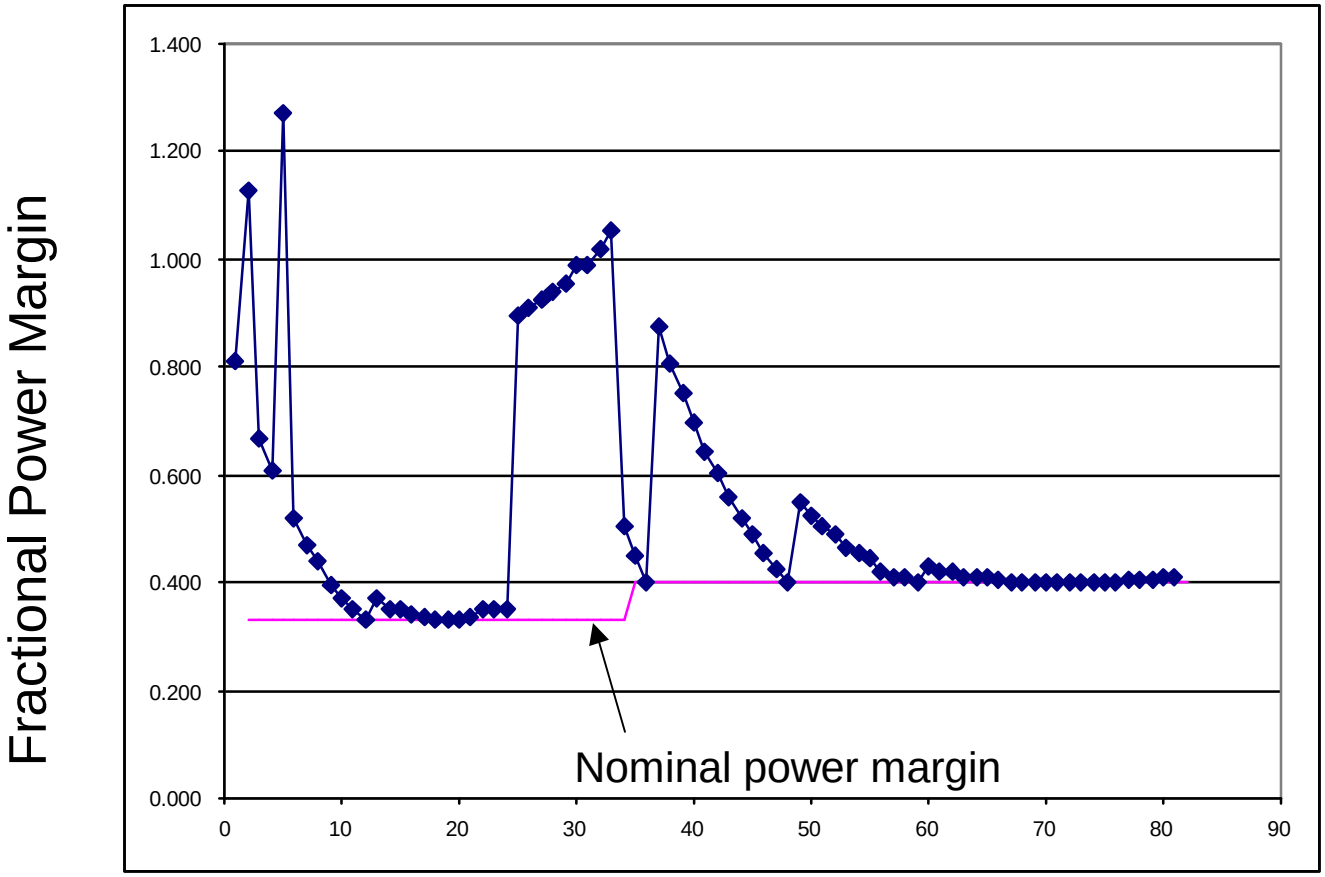

Modeling Work: Matlab is the basis for RF Control System models

- **Mathematical formulation for each block using modern control theory**
- **Analysis and Synthesis : Matlab m-files**
  - **Synthesis of all three Required Controllers**
    - **PI Feedback Controller**
    - **Feedforward Controller - (Robust) Iterative Learning Controller**
    - **Gain Scheduling Controller**
  - **Noise, Disturbance, Parameter Perturbation Analysis**
    - **Field Feedback Loop Uncertainty and Disturbance Analysis**
    - **Low Level RF Forward Loop Uncertainty and Disturbance Analysis**
    - **Beam Loading Effect Analysis**
    - **High Voltage Power Supply (HVPS) Ripple Analysis**
    - **Cavity Parameter Perturbation Analysis**
    - **Lorentz Force Detuning**
    - **Microphonics**

- **Simulation and Verification :**
  - **Matlab Simulink Models**

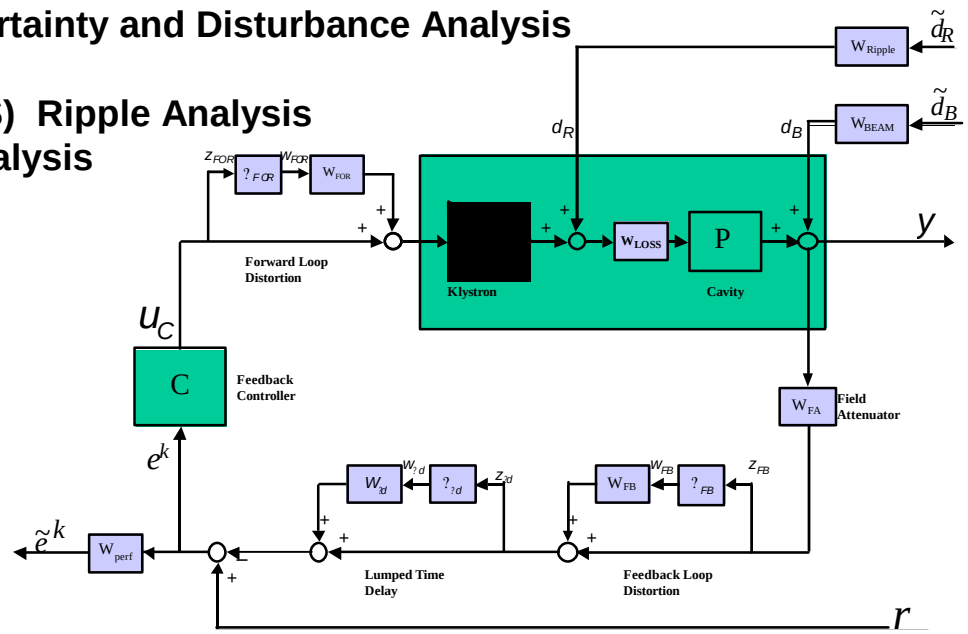

Modeling has been expanded to help define other parts of the system. e.g. HVPS Ripple Specification

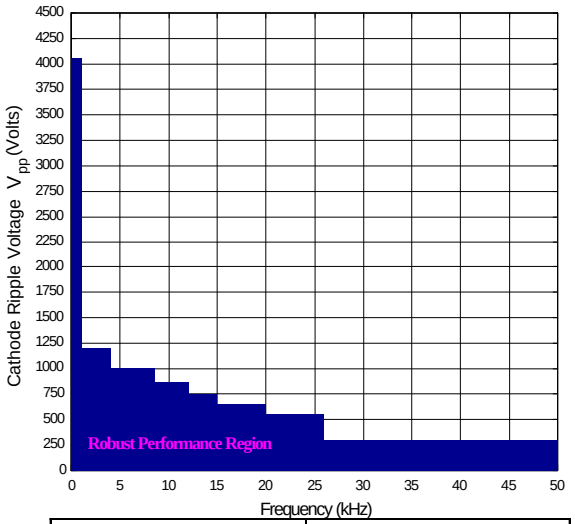

Cathode Ripple Voltage V_{pp} (Volts)	Frequency limits for Robust Performance (kHz)
250	Unlimited
500	26.0
600	20.0
700	15.0
825	12.0
950	8.5
1150	4.0
4000	0.8

80 kV Power Supply Ripple Spec.

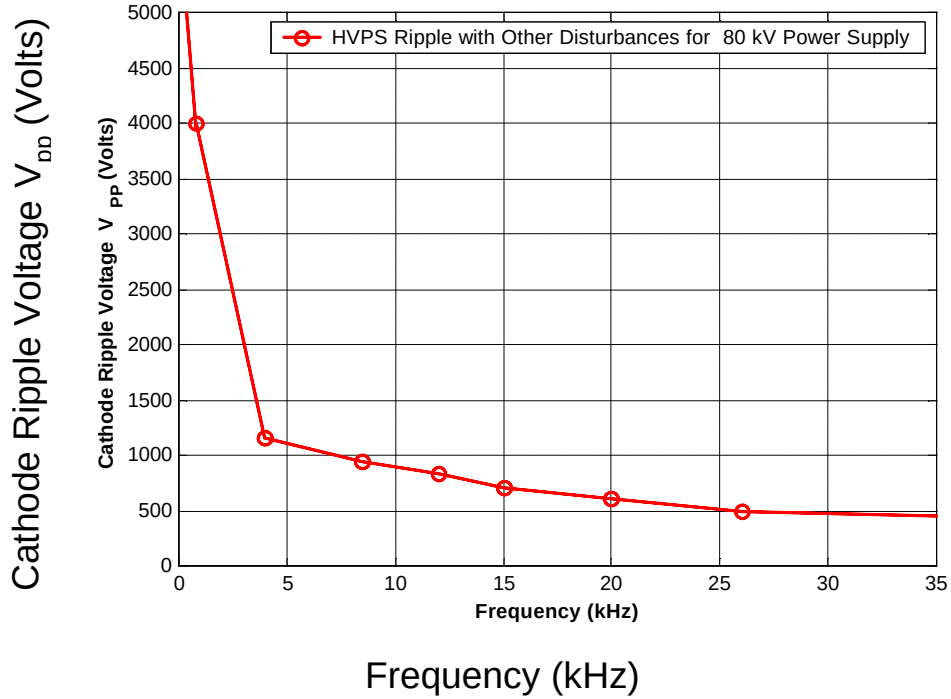

Feedforward Control

Iterative Learning Control

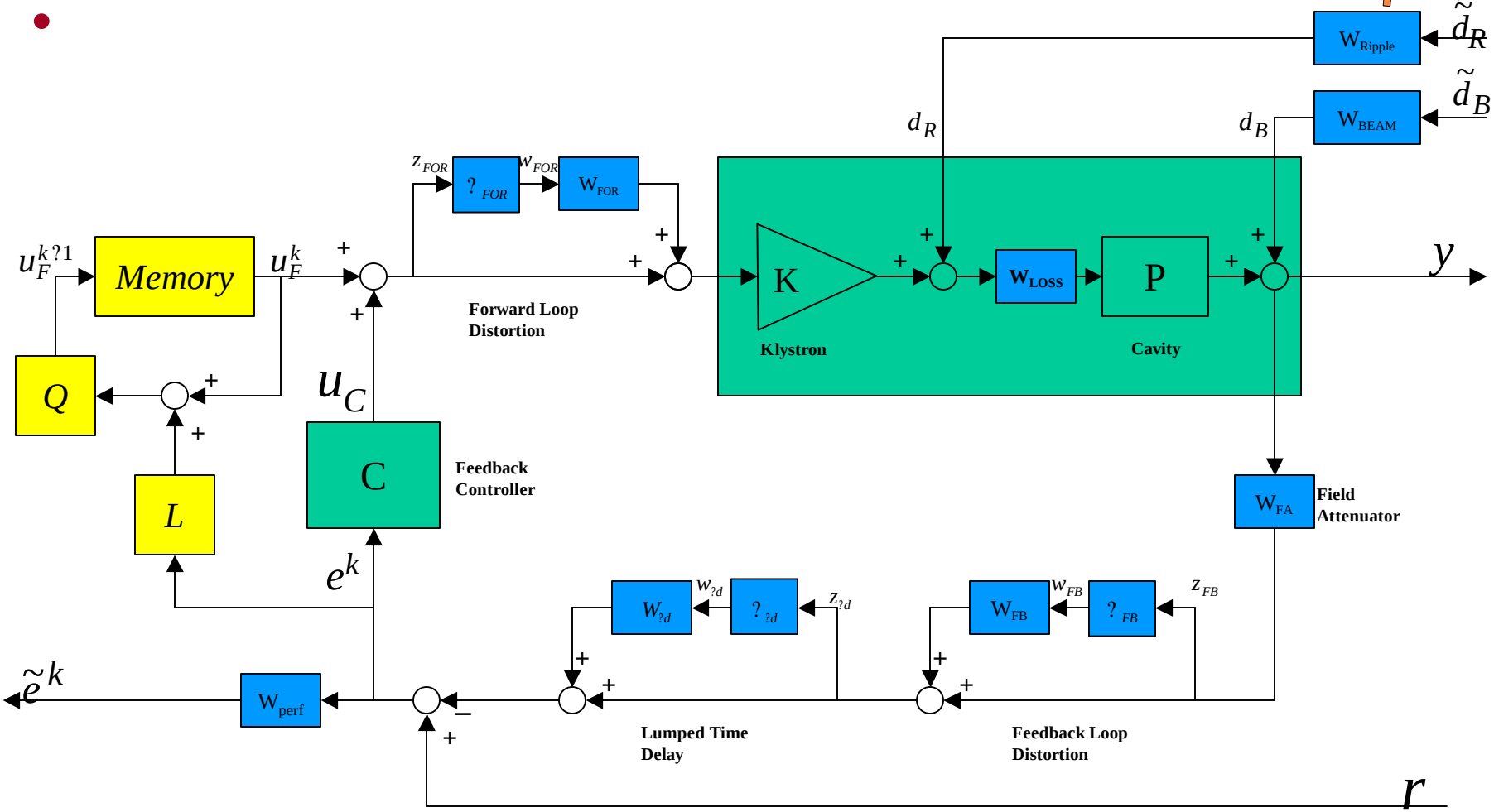

Feedback+Feedforward Controller

Field Amplitude

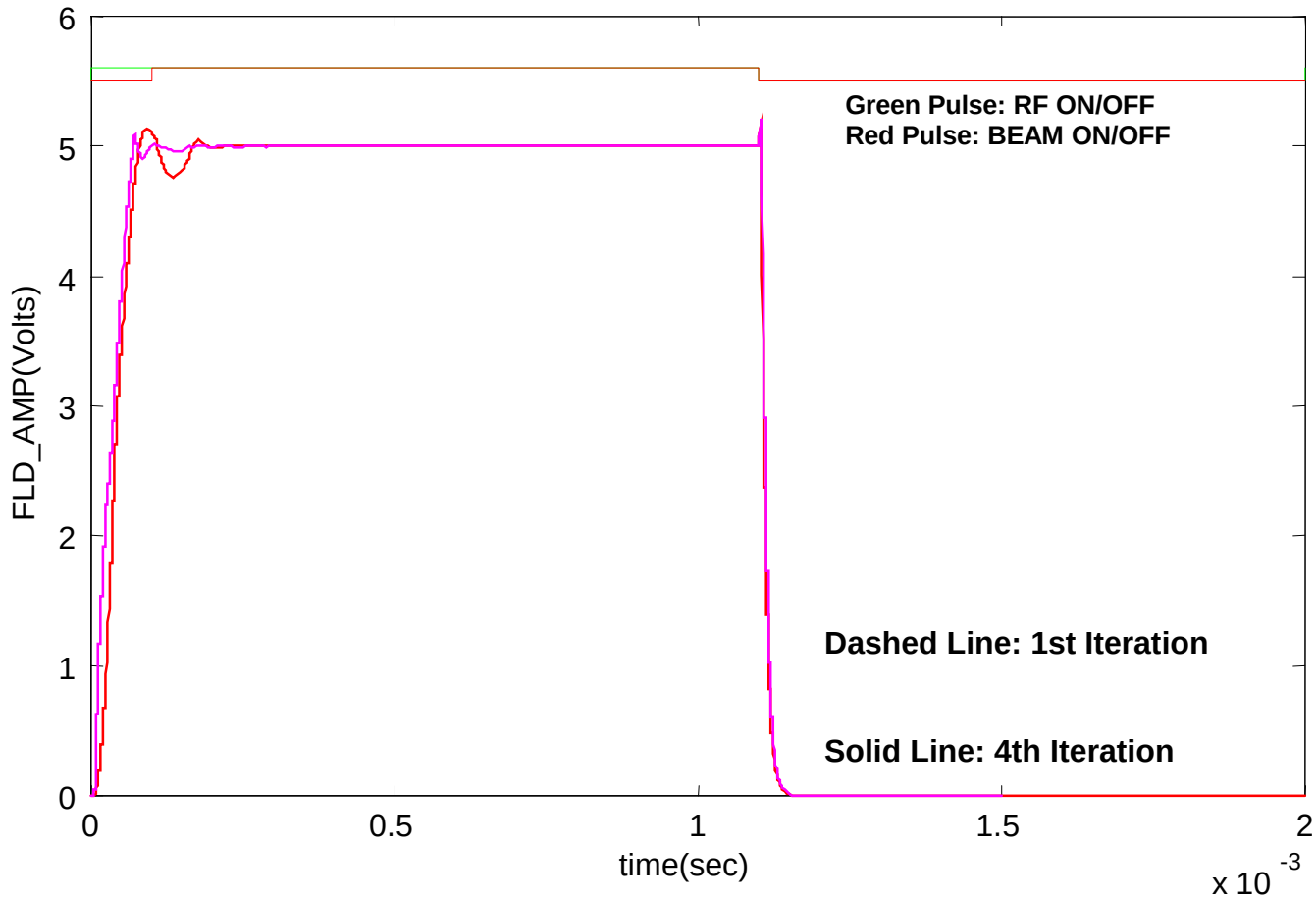

Zoom of Field Amplitude

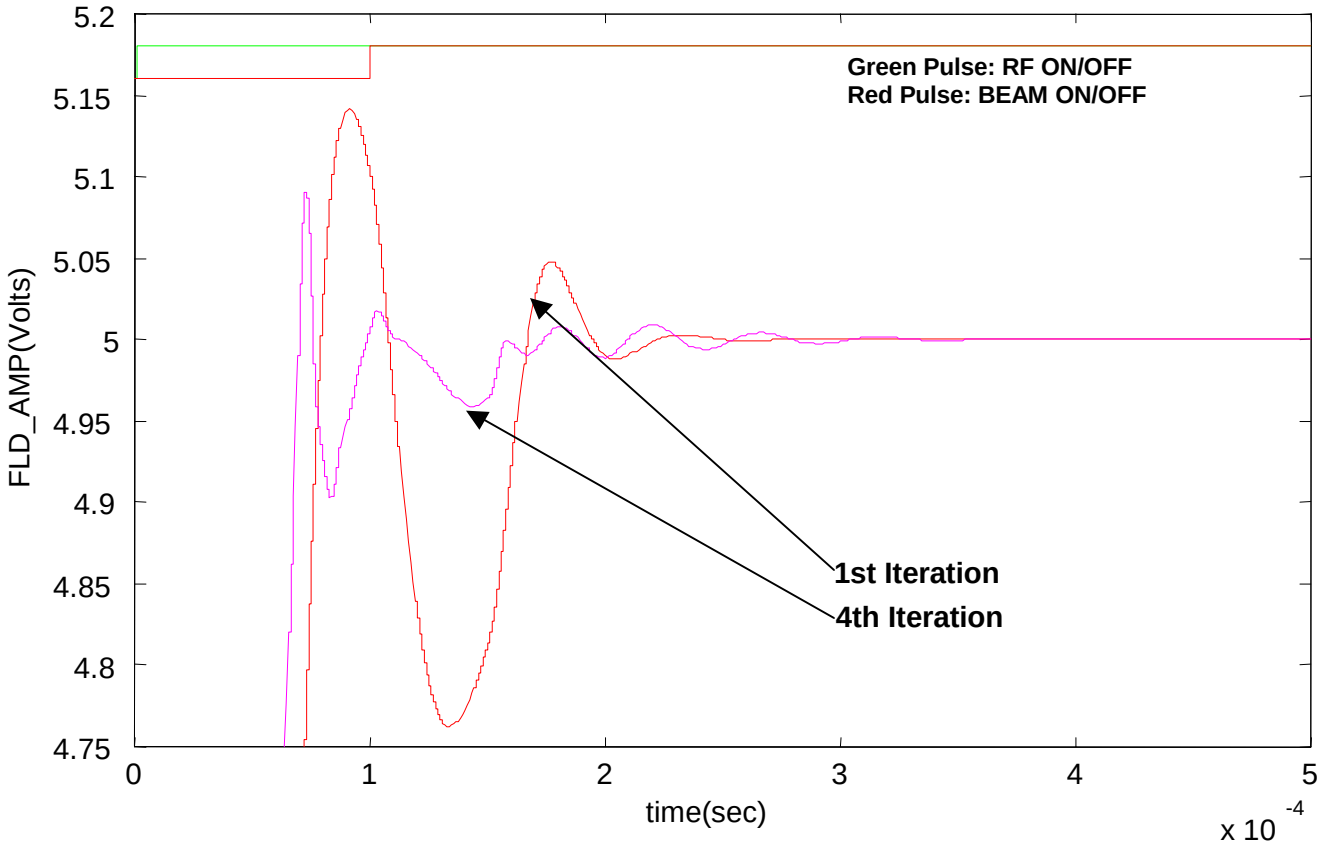

SRF Cabling Diagram

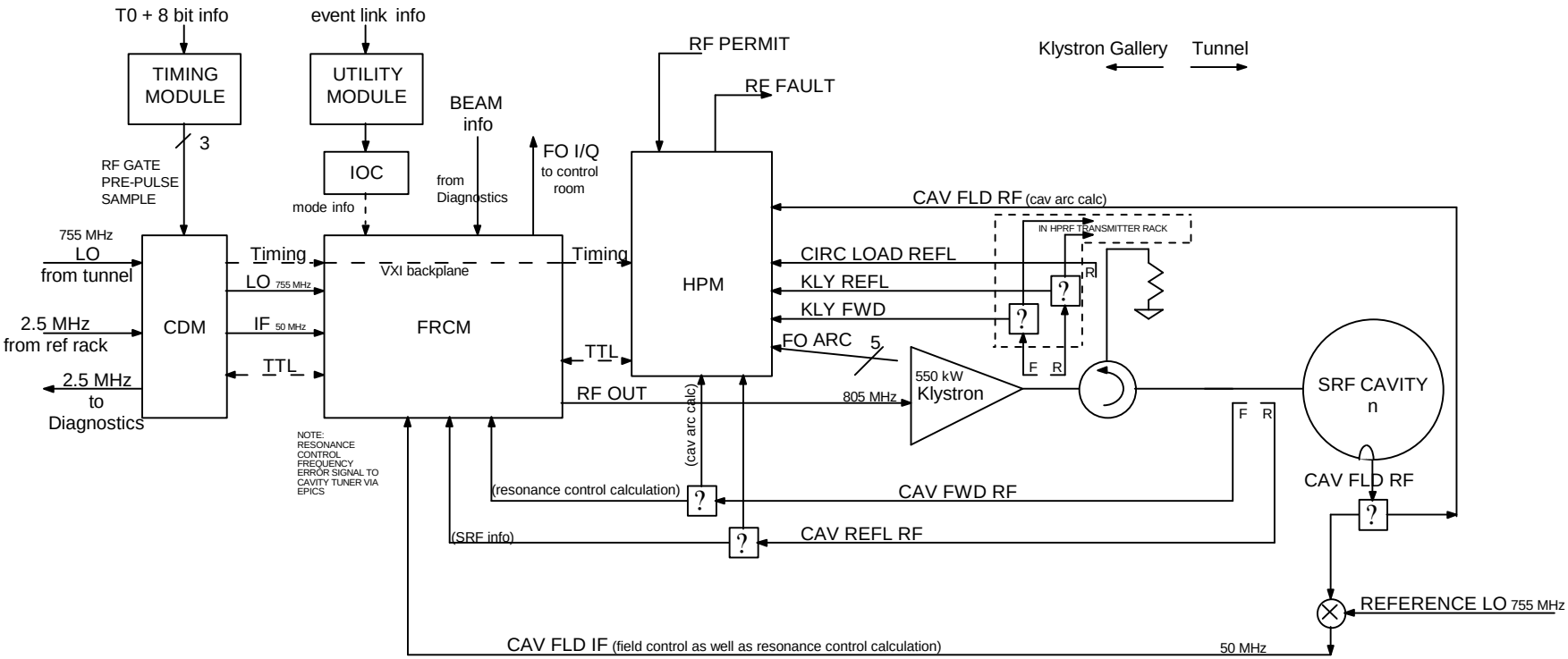

SRF Interlocks
- HPRF Protect Module functions

- Cavity Quench - see following slide
- Arc Detection - Arc detectors actually part of HPRF hardware. We're just the interface. The HPM has two opto-isolated command lines to the AFT FOARC detector chassis. Asserting one of the lines causes the AFT chassis to fault all the copper wire channels to the HPM. Asserting the other clears them
- Transmitted to incident ratio RF and beam inhibit - If ratio of transmitted to incident power remains below 10% of normal for more than 100 microseconds for given beam conditions, interrupt RF and beam for 5 seconds. If this occurs 5 times in 50 seconds, inhibit RF and beam until corrected.
  - We'll use threshold values from EPICS and subtraction of the log values (detector log-video amp RF detector IC (AD8313)
- Excess incident power inhibit of beam - If incident power is higher than power transferred to beam plus nominal reflected power by more than 10%, inhibit RF and beam until corrected.
  - the square-root of the forward power falls out by just shifting the log of the value (already there) one bit. Again, the burden would be on EPICS to send us the right threshold value, but that's a slow, one-time sort of calculation. The HPM calculation would be very fast. The problem with "inhibit RF and beam until corrected" is that with *any* fault we shut down to the end of the macropulse. Shutting off the RF clears the fault, and we will start up on the next go signal. It's not clear if this should be a latch off on the first trip or if we should depend on the chatter fault algorithm to protect us.

RF Cavity Quench Detection Strategy

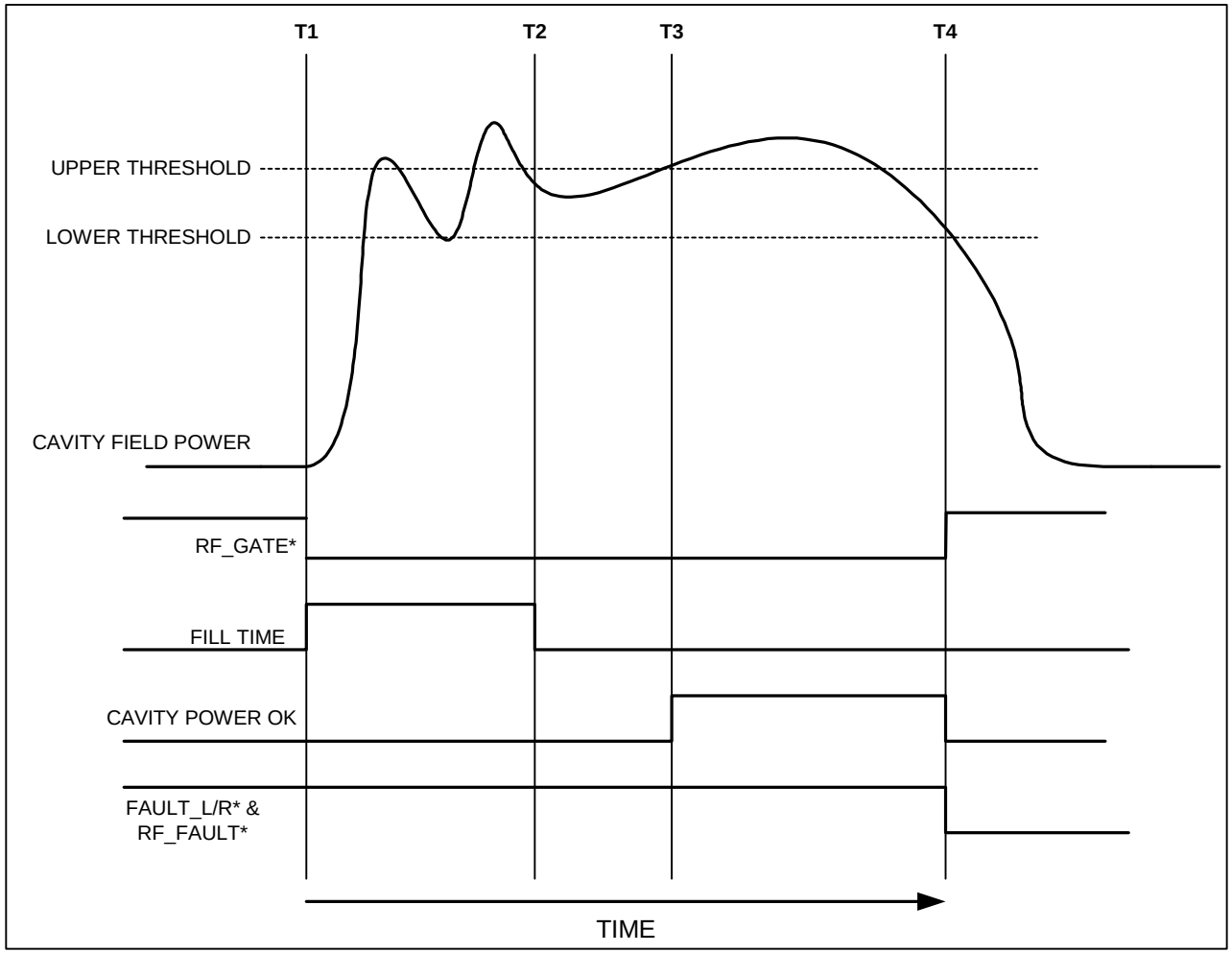

SRF Cavity Setup Plan (w.r.t. RFCS)

- On resonance?
  - Tuner tuning range ±250 kHz, first - step through drive frequency in 5 kHz steps
  - Once you get close, start looking at cavity phase as you trickle RF through. Start moving stepping motor to correct the frequency
  - Need to measure cavity phase during RF pulse & watch phase when RF turned off. If phase remains ”constant”, you’re on res.
  - If not tuned correctly, cavity phase goes off
- Calibration of pickup loop (for E_0 measurement)
  - Do with beam (100 ?s, 25-50 mA)
  - Excite cavity (no RF, just beam), know energy of beam, calculate cavity excitation.

External Timing Signals

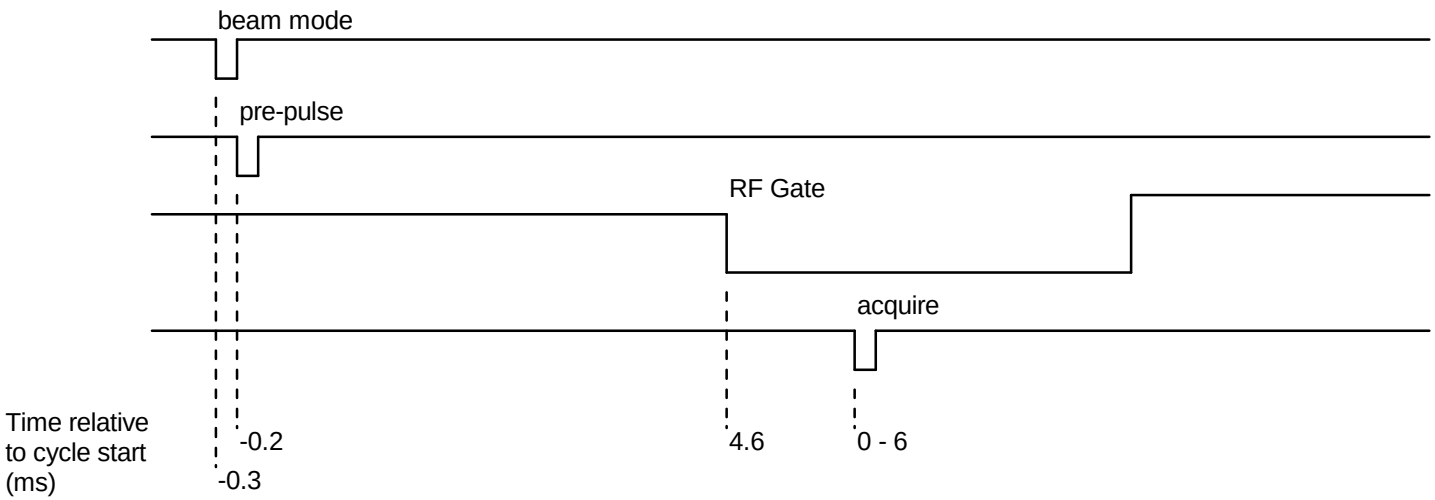

beam mode:
IOC is interrupted on the RTDL valid event and immediately writes the "beam mode" frame to registers on the FRCM modules

pre-pulse:
indicated that all required parameters have been written to the RF modules. TTL signal on VXI trigger bus

RF Gate:
triggers predetermined RF cycle. Precedes beam by 400 turns. This number of turns can optionally be adjusted to make the pulse precede beam by a fixed time, independent of event link period. TTL signal on VXI trigger bus

acquire:
triggers the acquisition of data for diagnostic purposes. TTL signal on VXI trigger bus

Cycle Start
Resets fault counters, starts delay counters, gate delay counters, etc. Systems with fine timestamp requirements start counting 16 MHz carrier cycles from this event.

RFCS interfaces with a variety of external systems.

This implies much more involvement of RFCS personnel over other RF people during beam startup.

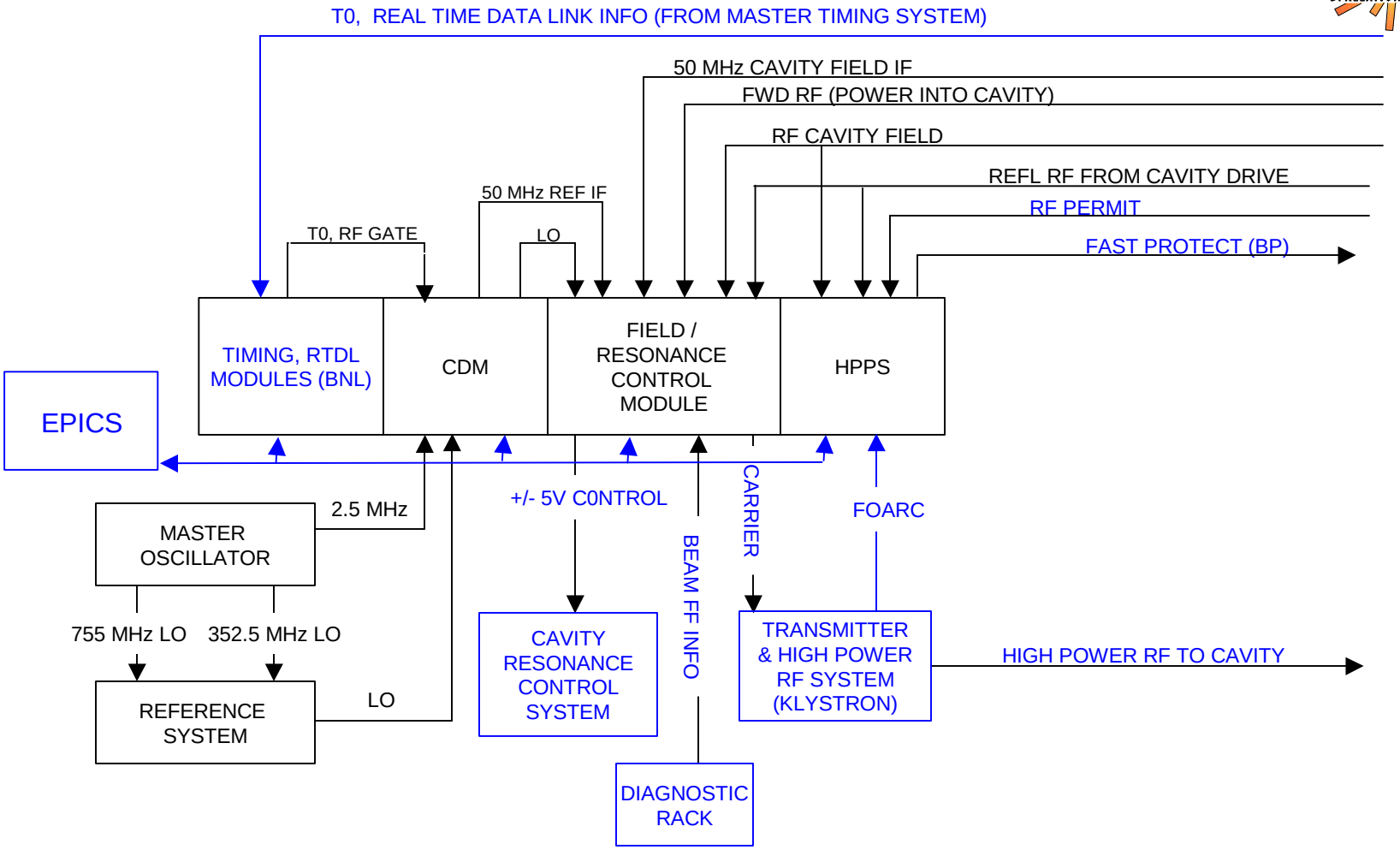

Integration & Commissioning Plan

First system of each type (NC 402.5 MHz, NC 805 MHz, SRF 805 MHz)

- Test complete system with EPICS at LANL
- Provide oversight for cable installation and rack installation at ORNL
- Ship to ORNL
- Install / Integrate with external systems in situ, with ORNL support

Next 2-4 systems of each type

- Ship directly to ORNL from Contract Manufacturer
- Install / Integrate with external systems in situ, with ORNL support

5-N systems

- Support ORNL installation integration efforts

RF Controls Summary

- **System specification released; available on the web**
  - http://lib-www.lanl.gov/la-pubs/00417485.pdf
- **Module designs progressing**
  - Schematics into ECAD for Printed Circuit Board Layout now
  - Expect three boards to go out within two weeks time
- **Reference line prototype to be built soon.**
  - Most pieces have been delivered. Will be built in LANSCE building

The following are slides for backup material if people are interested

Risetimes and Settling Times

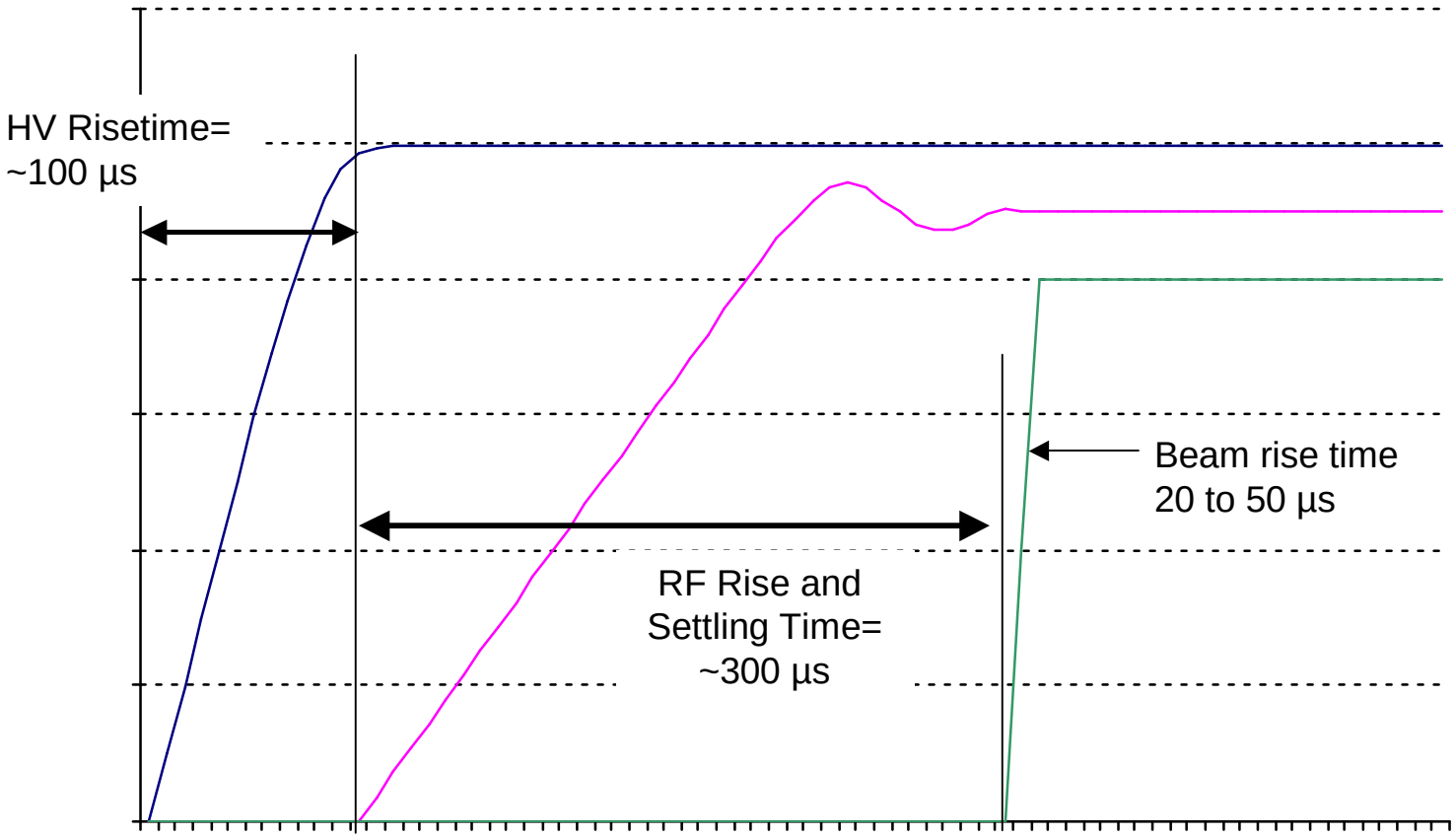

RF System Block Diagram, 0.55 MW klystrons

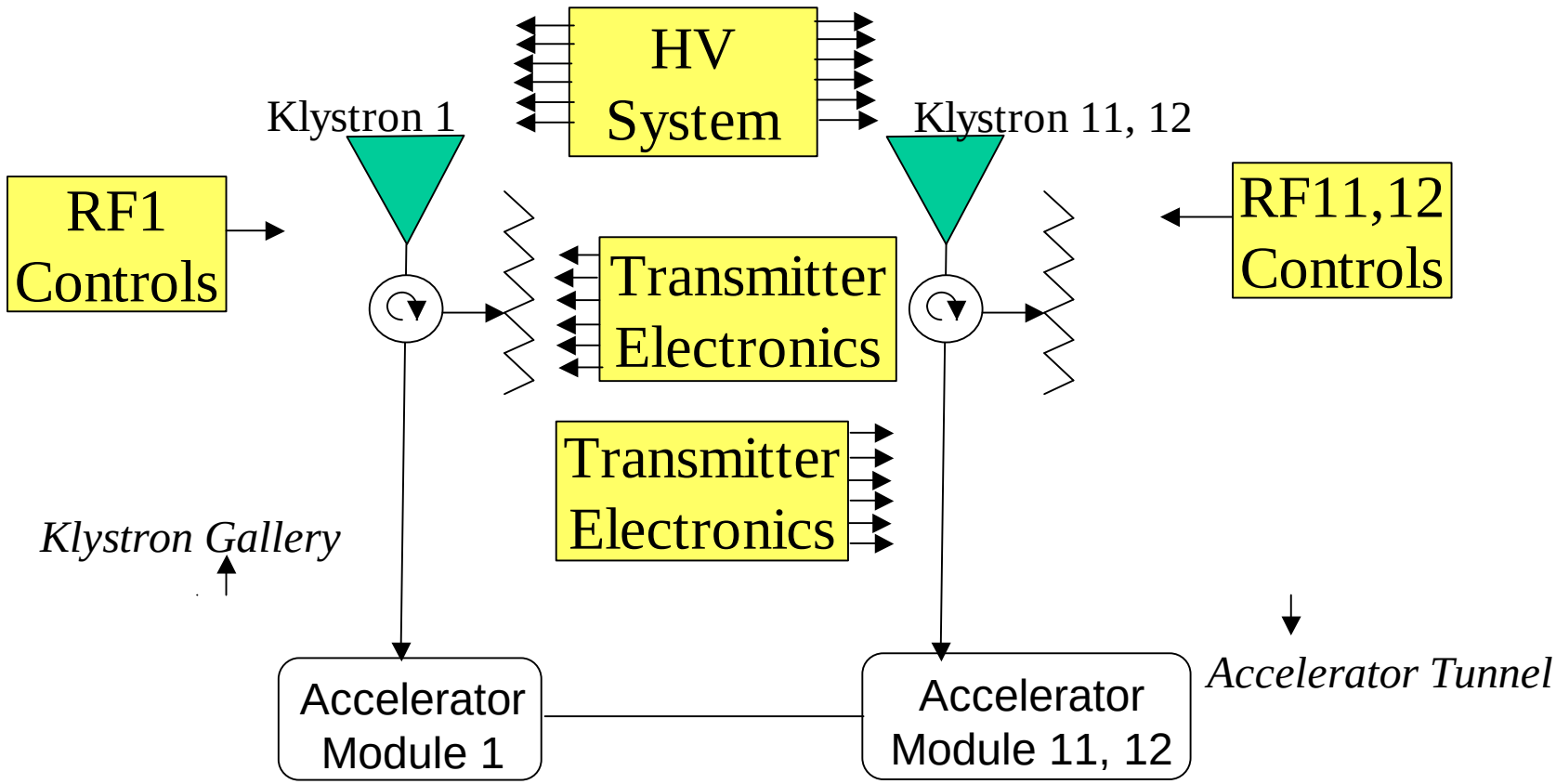

Design field gradients for the two different superconducting cavities

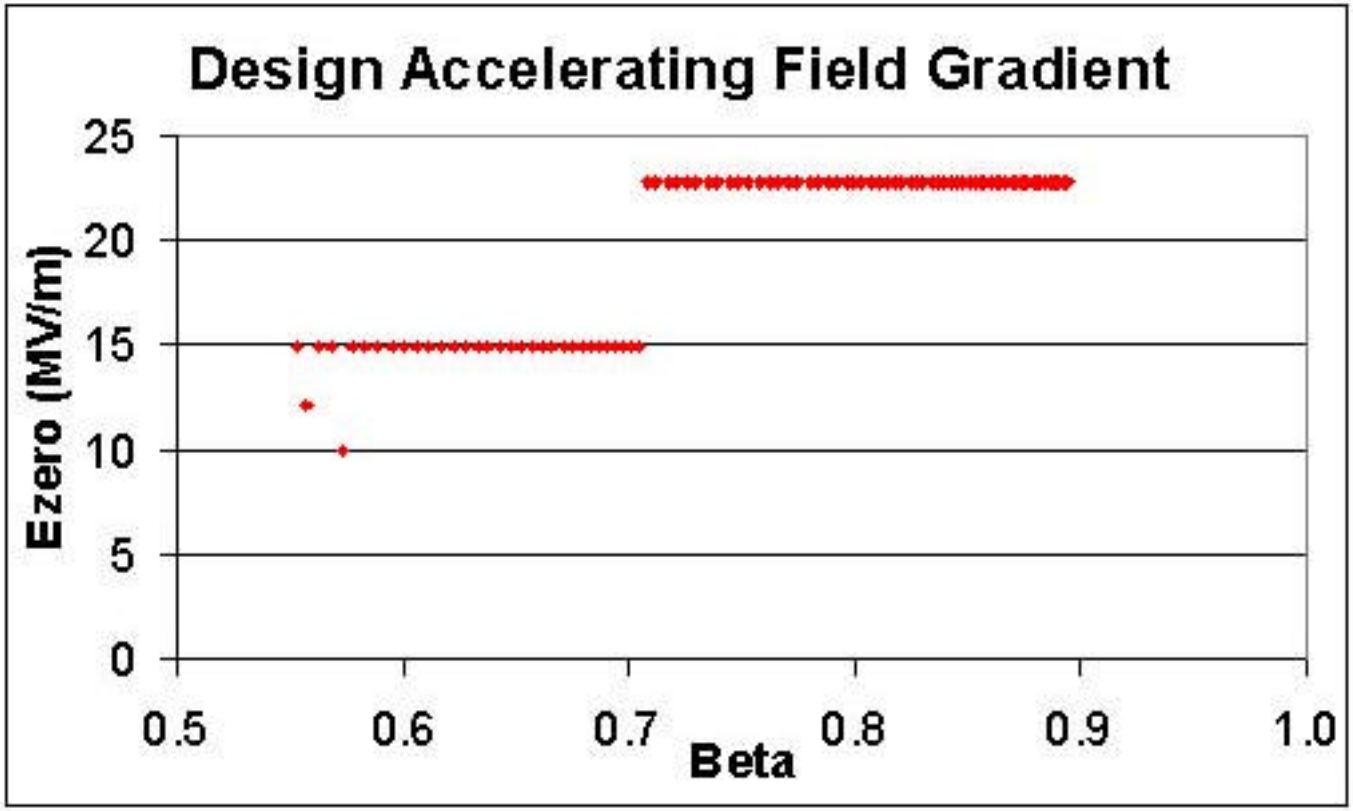

Synchronous phase angles for each cavity

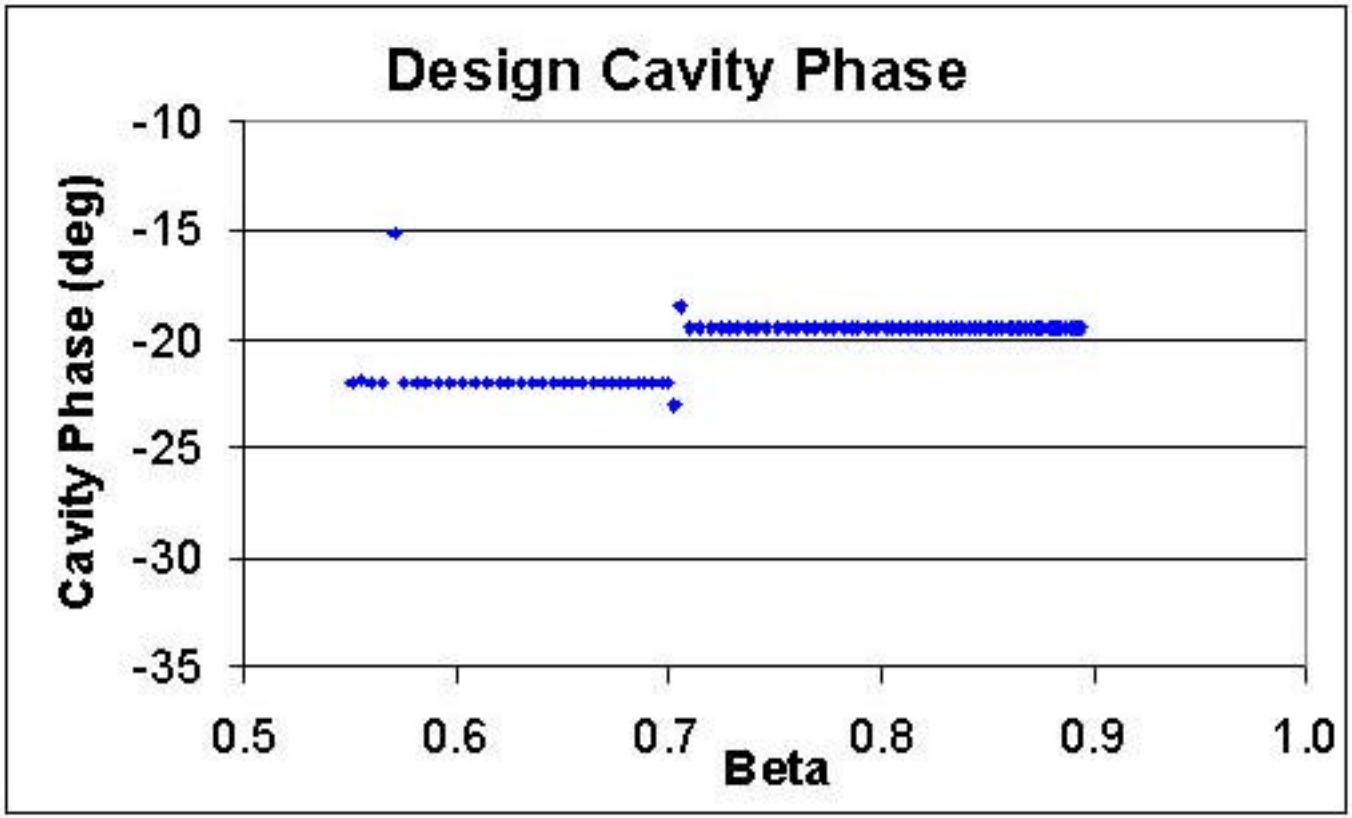

The design energy gain per cavity based on the design fields and phase

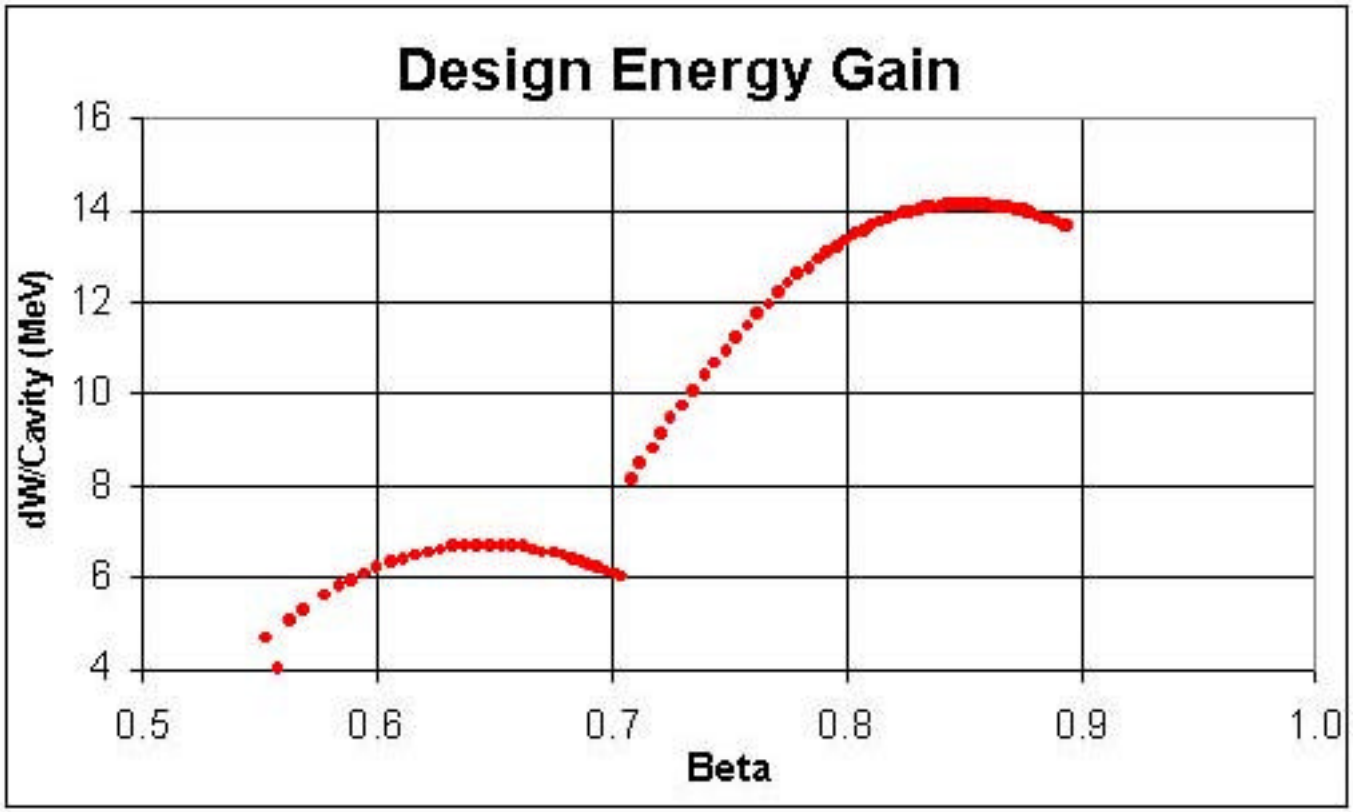

Klystron power needed for each cavity, including beam power and power margin for controls and losses

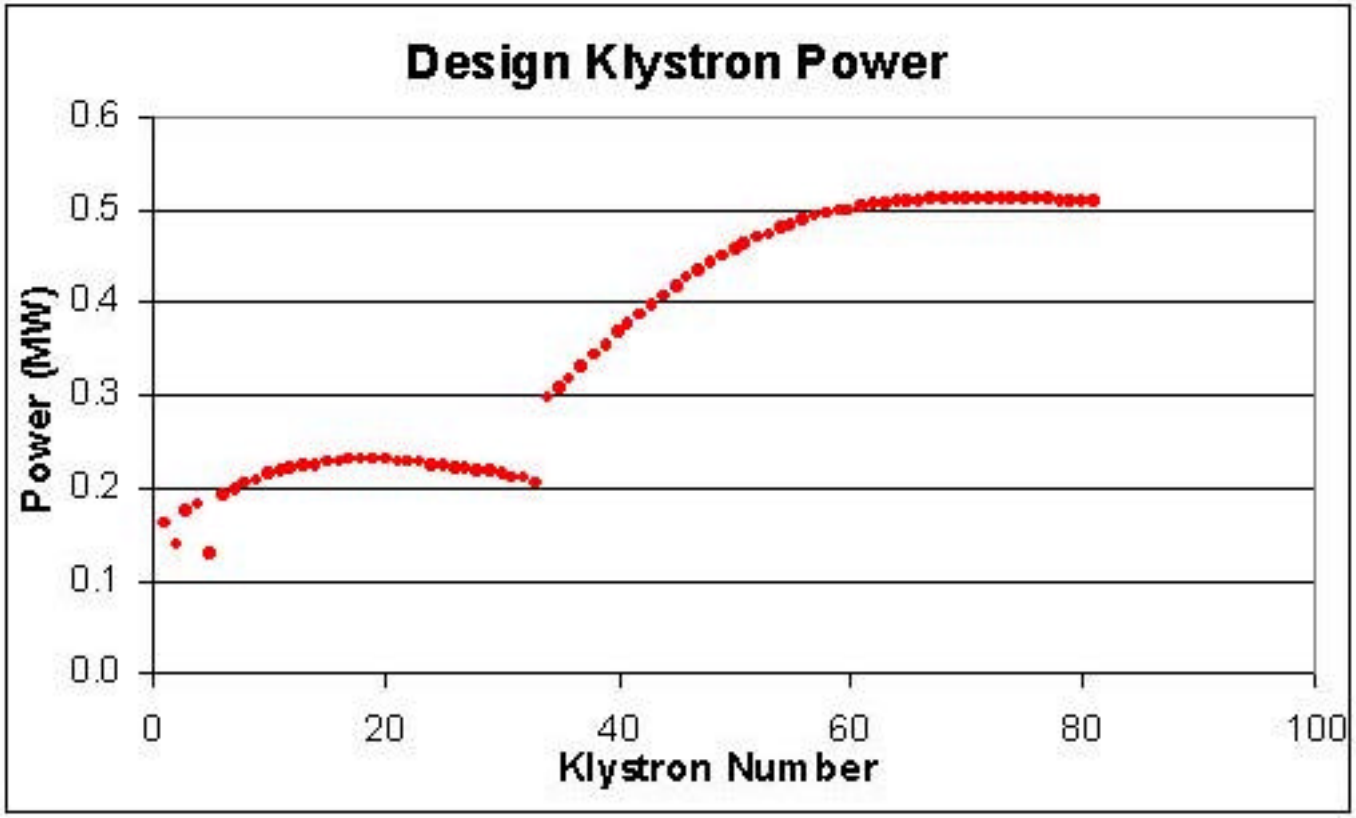

Excess power margins are 33% for low beta and 40% for high beta cavities

Generator power required and the saturated operating point for each klystron in the superconducting section

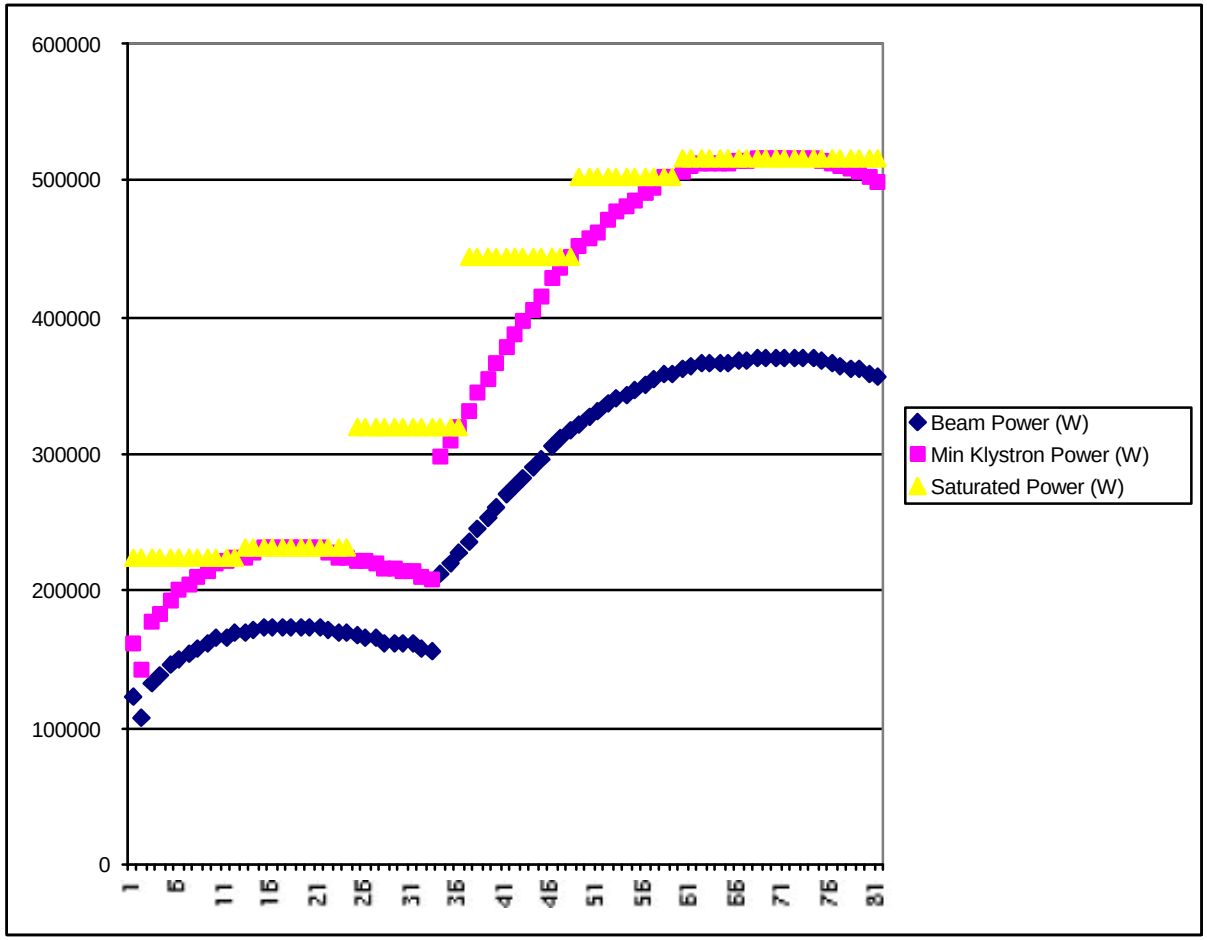

VXIbus Interfaces

Channel	Name	Source	User	Function
ECLTRG00	40MHZ	CDM	ALL	40 MHZ clock (rising edge mark)
ECLTRG01	10MHZ	CDM	ALL	10 MHZ clock (rising edge mark sync'd to 40 MHz)
LBUS[00..11]	LBUS			Not used
TTLTRG0*	SAMPLE*	CDM	ALL	Synchronous data sample strobe. Latch data on falling edge, clear data registers on rising edge.
TTLTRG1*	SRF_INHIBIT	FRCM	HPM	SRF tuning mode fault inhibit. Orders HPM to ignore RF faults for duration of SRF_TIME during tuning of SRF cavities. Timer starts on falling edge of SRF_INHIBIT.
TTLTRG2*				Spare
TTLTRG3*	RF_GATE*	CDM	ALL	LOW when RF is ON / HIGH when OFF.
TTLTRG4*	T0	CDM	ALL	T0 sync pulse from master timing system. Falling edge is fiducial.
TTLTRG5*	FAULT_L*	ALL	HPM	RF fault in LEFT half of crate. (Klystron A). LOW = FAULT (RF off)
TTLTRG6*	RF_FAULT*	FRCM HPM	MPS	Tell MPS to turn off beam during faults. LOW = FAULT (Beam off)
TTLTRG7*	FAULT_R*	ALL	HPM	RF fault in RIGHT half of crate. (Klystron B). LOW = FAULT (RF off)