# Design of LLRF of ELBE

Andree Buechner
FZ-Rossendorf

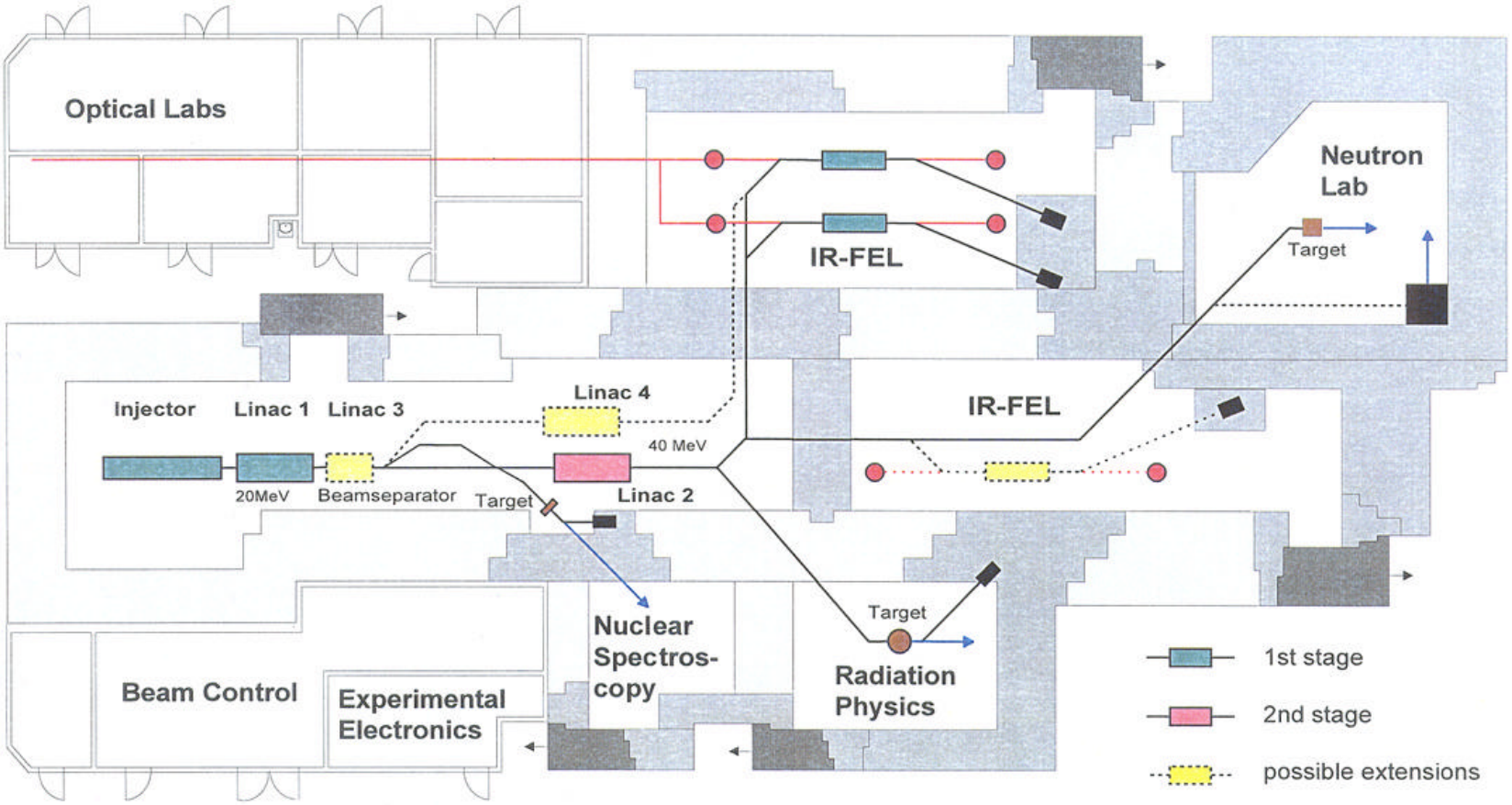
Optical Labs
IR-FEL
Neutron Lab
Target
Injector
Linac 1
Linac 3
Linac 4
40 MeV
IR-FEL
20MeV
Beamseparator
Target
Linac 2
Nuclear Spectros-copy
Target
Radiation Physics
Beam Control
Experimental Electronics
1st stage
2nd stage
possible extensions

# The Superconducting Electron Linear Accelerator

## Projected Parameters of the Electron LINAC

| Application | | FEL, Nuclear Physics | Radiation Physics |
|---|---|---|---|
| Type of injector | | pulsed | Pulsed with apertures |
| LINAC-Energy: | minimal | 12 MeV | 12 MeV |
| | maximal | 40 MeV | 40 MeV |
| Energy dispersion (rms) | | 90 keV | 90 keV |
| Bunch charge | | 65 pC | |
| Average beam current in cw-Mode | | 0.85 mA | 0.1 mA |
| Average macropulse current | | 0.85 mA | 0.1 mA |
| Normalized transverse emittance (rms) | | 20 mm mrad | 3 mm mrad |
| Normalized longitudinal emittance (rms) | | 140 keV ps | |
| Time structure: | Micropulse duration (90%) | 2 - 10 ps | |
| | Micropulse repetition rate | 13; 26 MHz | 13; 26; 260 MHz |
| | Macropulse duration | 0.1 - 40 ms | 0.1 - 40 ms |
| | Macropulse repetition rate | 25 Hz max. | 25 Hz max. |
| | cw mode | yes | yes |

# ***RF-Project for ELBE***

Requirements

- Frequency stability better $3*10^{-9}$
  (over the whole temperature and operating range over years)
- Phase noise / Jitter better 0.5 ps (rms)
  (at 10 Hz to 1 kHz carrier distance)
- Phase stability better 0.1° (rms)
- Amplitude stability better $10^{-4}$

Frequency generation

- Quartz oscillators
- PLL oscillators
- Needed frequencies: 1300 MHz, 13 MHz, 26 MHz, 260 MHz, (1313 MHz ?)

Pulse generation for the gun

- Pulse amplitude for at least 100 pC
- Pulse width smaller than 600 ps
- Optical links for high voltage insulation
- Interlock and commissioning options

Phase and amplitude stabilization

- For 2 bunchers (260 MHz and 1300 MHz)
- For up to 6 cavities at 1300 MHz
- In future for a beam separation cavity (may be 1313 MHz)

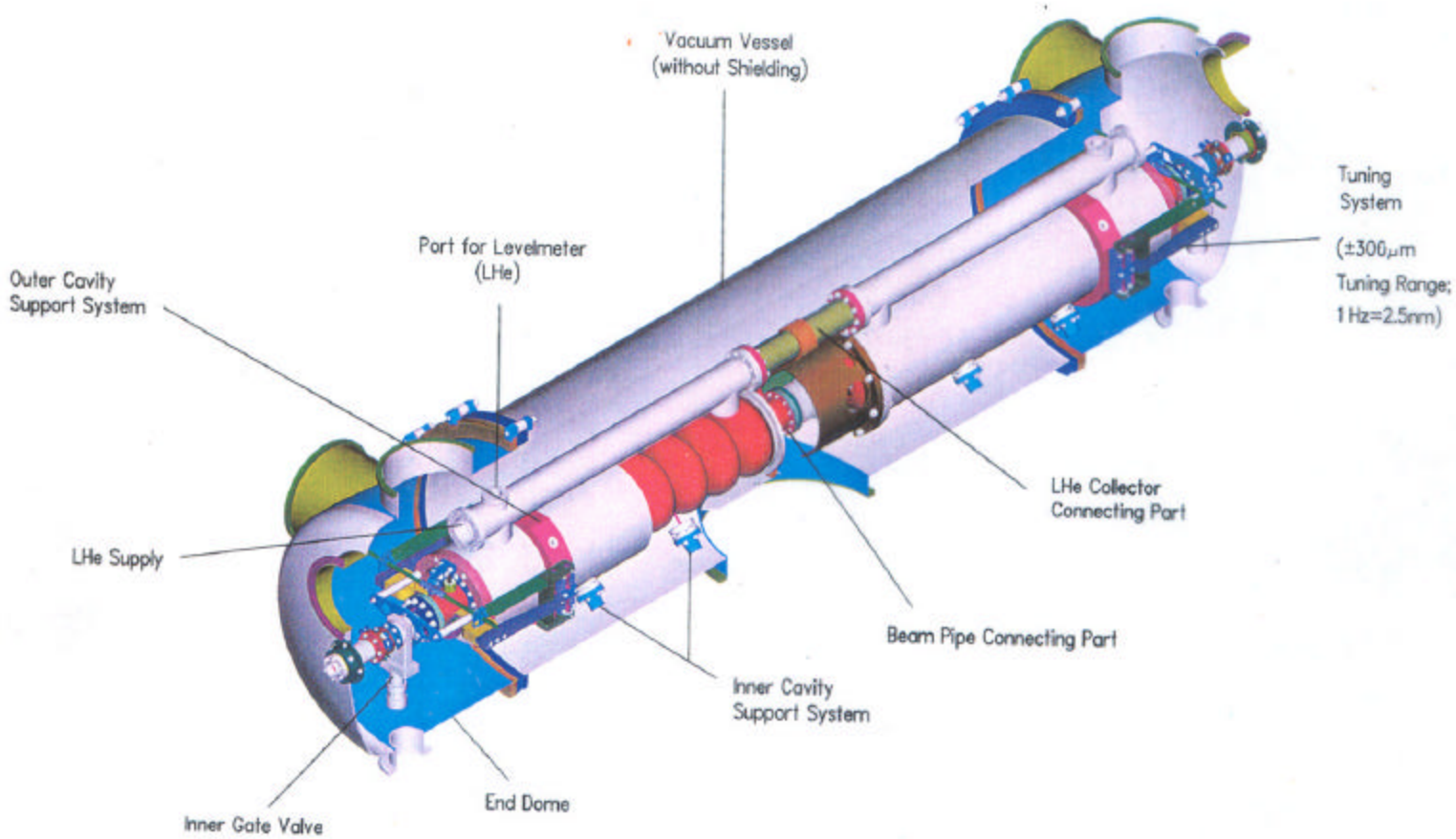
Vacuum Vessel
(without Shielding)
Tuning
System
(±300μm
Tuning Range;
1 Hz=2.5nm)
Port for Levelmeter
(LHe)
Outer Cavity
Support System
LHe Collector
Connecting Part
LHe Supply
Beam Pipe Connecting Part
Inner Cavity
Support System
End Dome
Inner Gate Valve

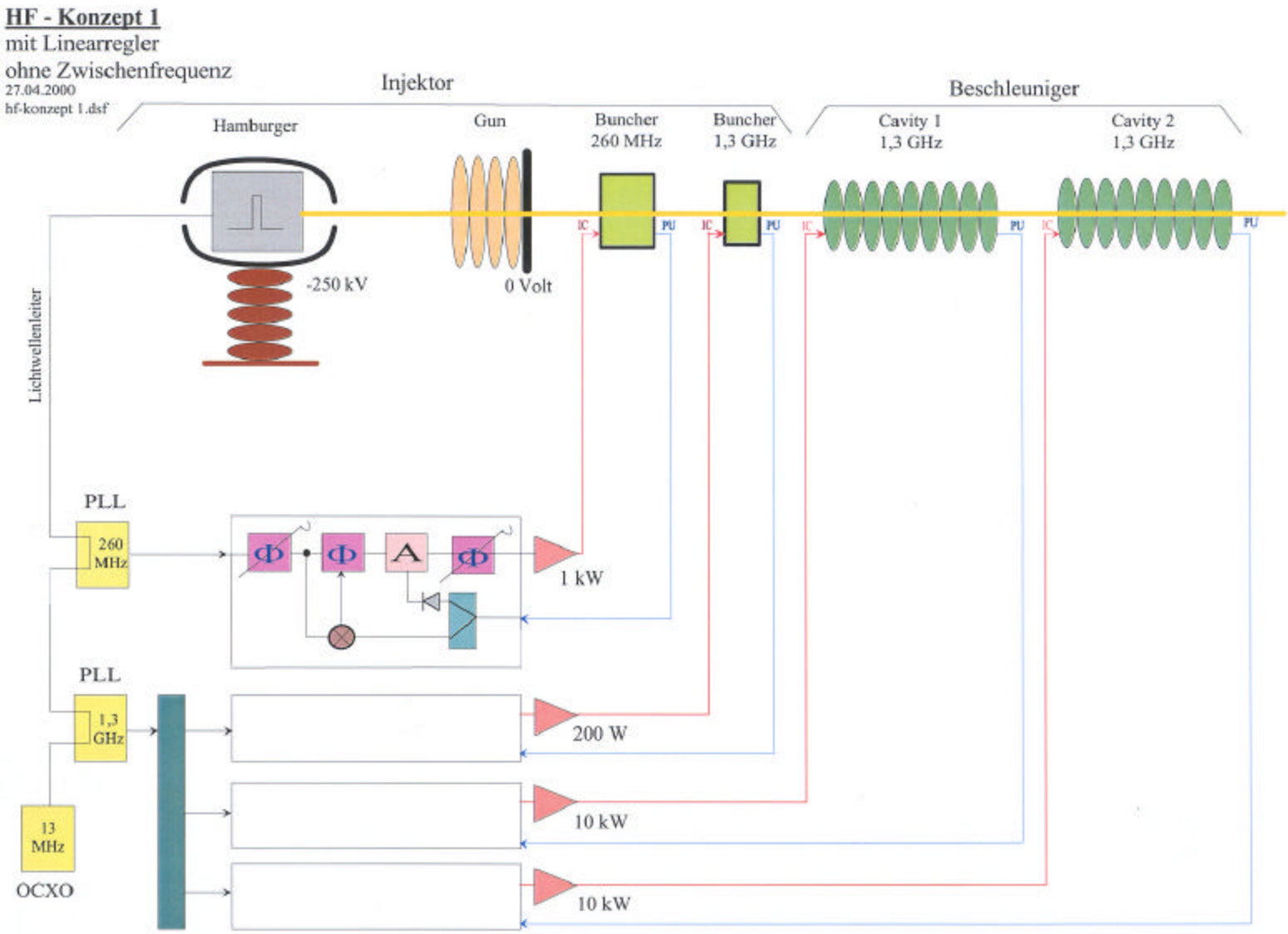
HF - Konzept 1
mit Linearregler
ohne Zwischenfrequenz
27.04.2000
hf-konzept 1.dsf
Injektor
Beschleuniger
Hamburger
Gun
Buncher
260 MHz
Buncher
1,3 GHz
Cavity 1
1,3 GHz
Cavity 2
1,3 GHz
-250 kV
0 Volt
IC
PU
Lichtwellenleiter
PLL
260
MHz
1 kW
PLL
1,3
GHz
200 W
10 kW
10 kW
13
MHz
OCXO

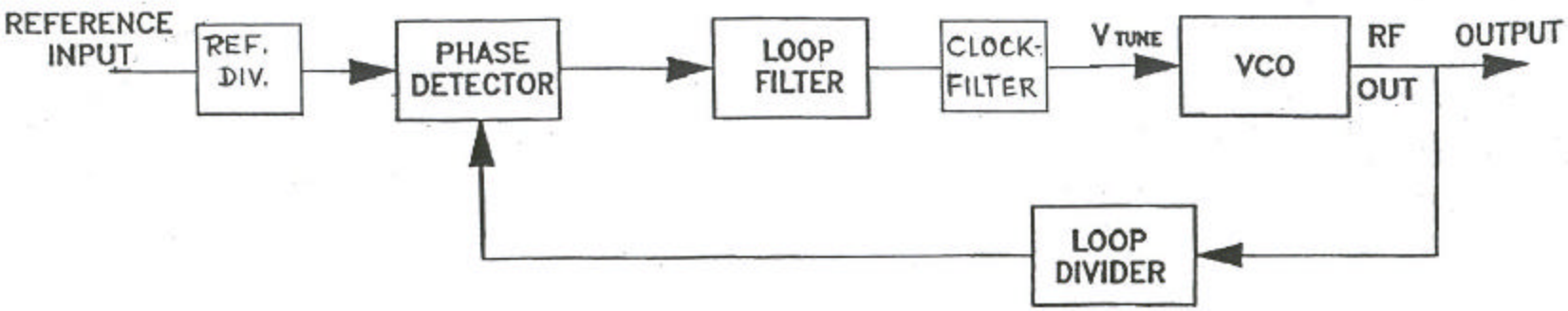
REFERENCE INPUT
REF. DIV.
PHASE DETECTOR
LOOP FILTER
CLOCK-FILTER
V TUNE
VCO
RF OUT
OUTPUT
LOOP DIVIDER

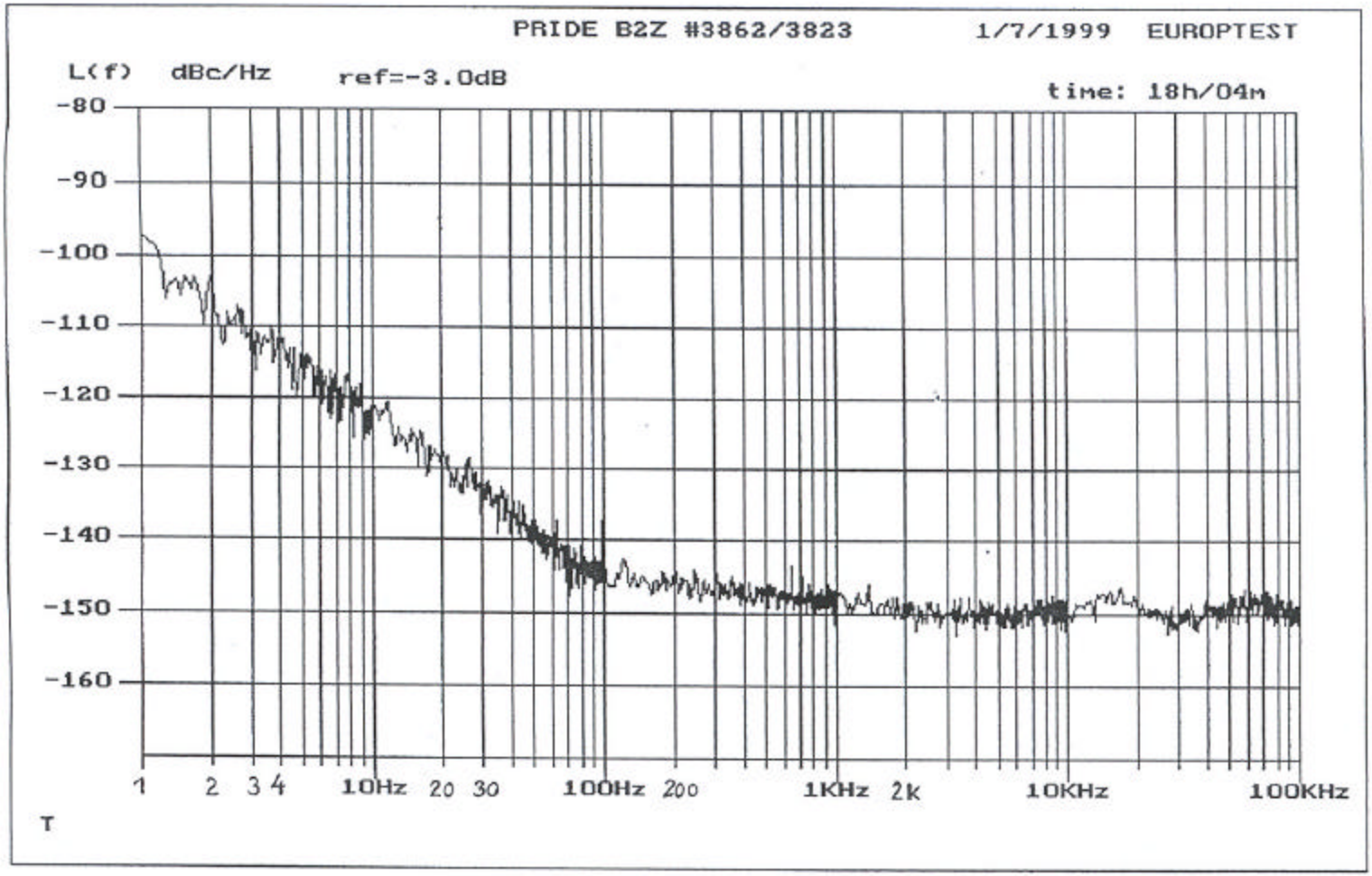
PRIDE B2Z #3862/3823
1/7/1999 EUROPTEST
L(f) dBc/Hz
ref=-3.0dB
time: 18h/04m
-80
-90
-100
-110
-120
-130
-140
-150
-160
1
2
3 4
10Hz
20
30
100Hz
200
1KHz
2k
10KHz
100KHz
T

Nr. 1 + 2 13 MHz

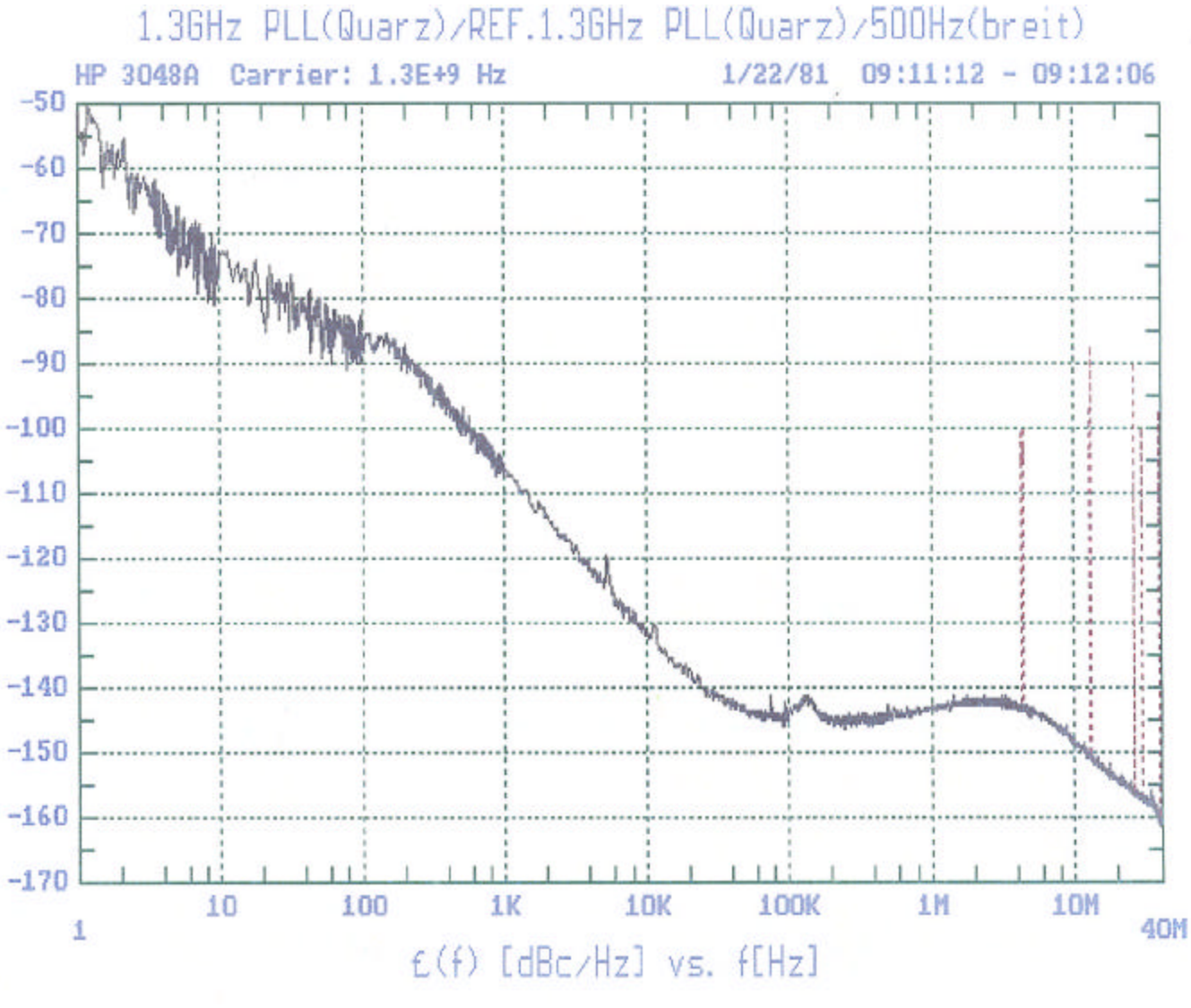
1.3GHz PLL(Quarz)/REF.1.3GHz PLL(Quarz)/500Hz(breit)
HP 3048A Carrier: 1.3E+9 Hz
1/22/81 09:11:12 - 09:12:06
-50
-60
-70
-80
-90
-100
-110
-120
-130
-140
-150
-160
-170
1
10
100
1K
10K
100K
1M
10M
40M
ℒ(f) [dBc/Hz] vs. f[Hz]

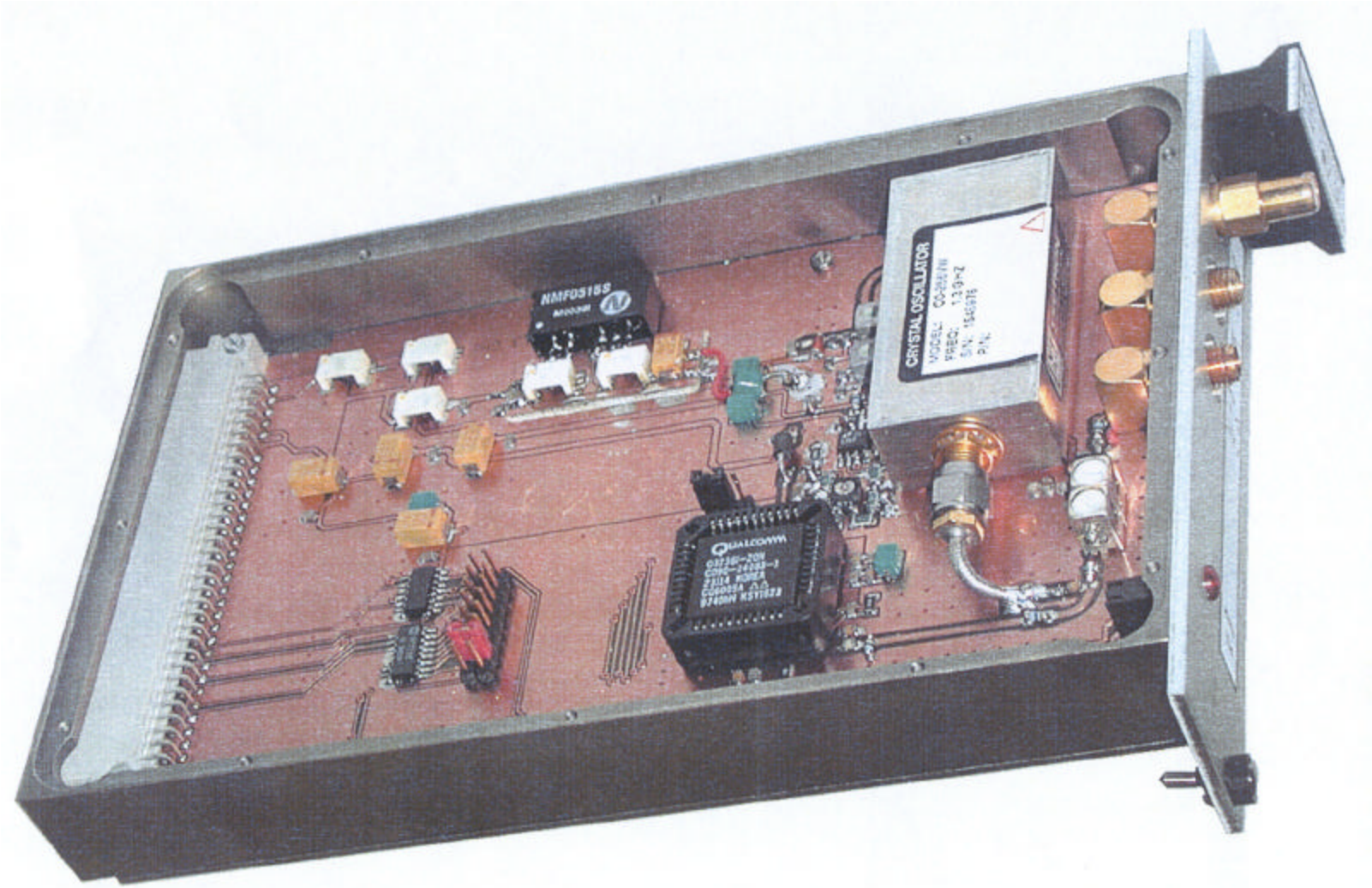
NMF0515S
CRYSTAL OSCILLATOR
QUALCOMM

# HF-Stabilisierung für Cavities Controller

24.03.00

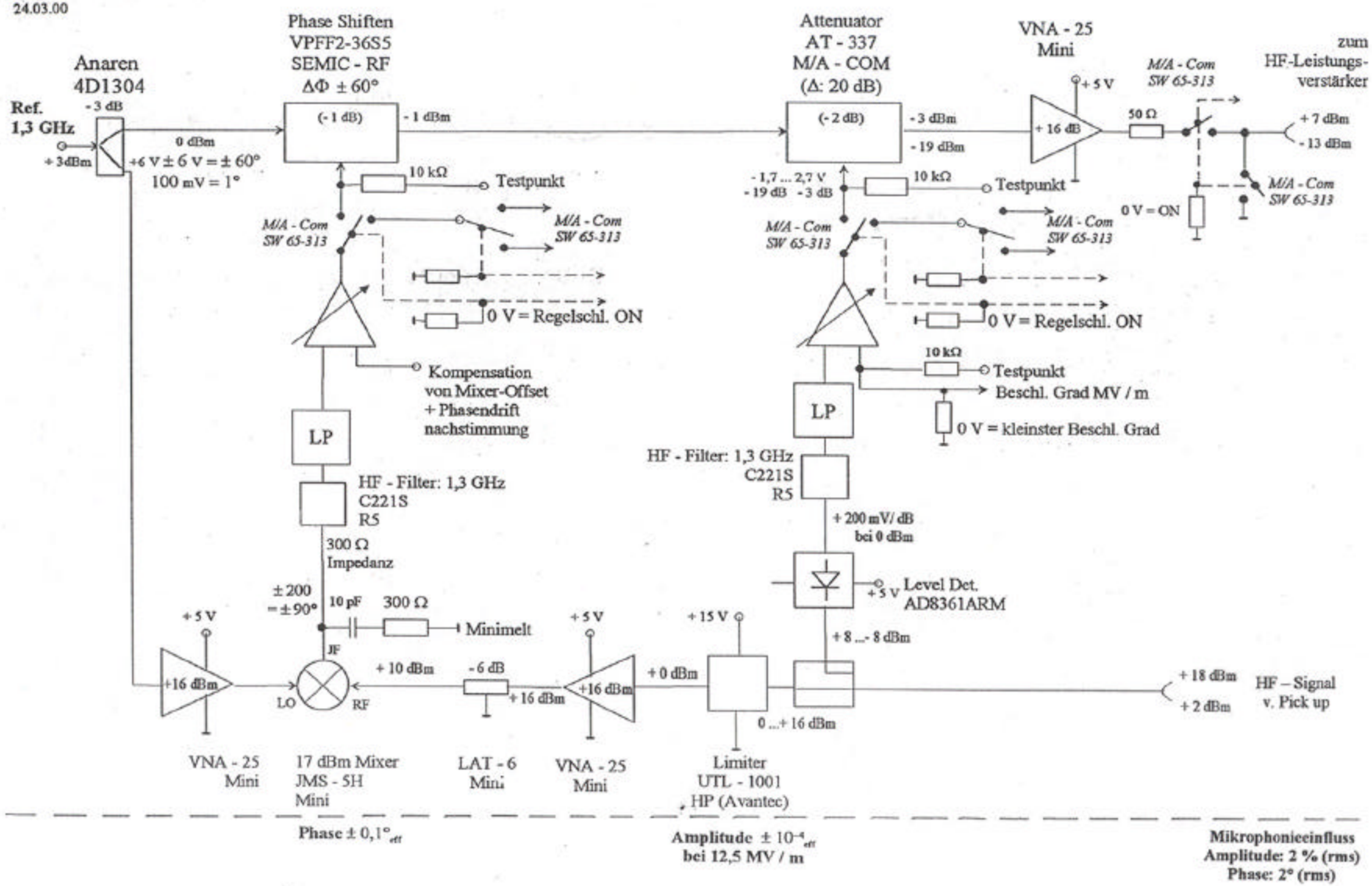


FZ Rossendorf

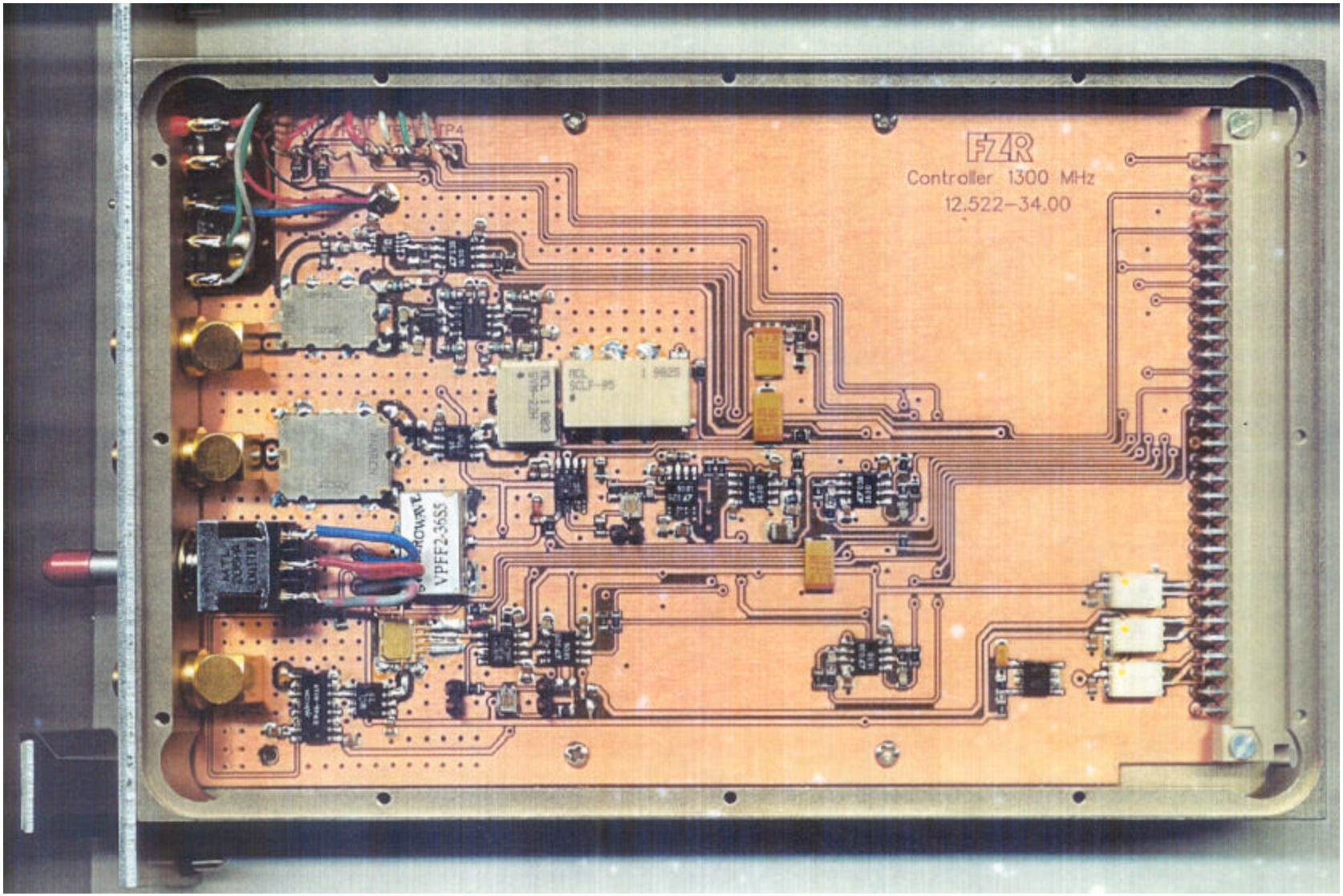


Andree Buechner
FZ Rossendorf

LLRF Workshop, April 25 – 27, 2001