CARE/JRA3: First Quarterly Report 2005
10/05/2005

Title: High Intensity Pulsed Proton Injectors (HIPPI)
Coordinator: R. Garoby (CERN), Deputy: M. Vretenar

Work supported by the European Community-Research Infrastructure Activity under the FP6 "Structuring the European Research Area" programme (CARE, contract number RII3-CT-2003-506395).

CARE/JRA3: First Quarterly Report 2005
10/05/2005

Title: High Intensity Pulsed Proton Injectors (HIPPI)

Coordinator: R. Garoby (CERN), Deputy: M. Vretenar

Participating Laboratories and Institutes:

Institute (participant number)	Acronym	Country	Coordinator	Scientific Contact	Associated to
CCLRC Rutherford Appleton Laboratory (20)	CCLRC	UK	P. Norton	C. Prior	
Commissariat à l'Energie Atomique (1)	CEA	F	R. Aleksan	A. Mosnier	
CERN (17)	CERN	CH	G. Guignard	R. Garoby	
Forschungszentrum Jülich (7)	FZJ	D	R. Tölle	R. Tölle	
Gesellschaft für Schwerionenforschung, Darmstadt (4)	GSI	D	N. Angert	L. Groening	
Institut für Angewandte Physik - Frankfurt University (5)	IAP-FU	D	U. Ratzinger	U. Ratzinger	
INFN-Milano (10)	INFN-Mi	I	S. Guiducci	C. Pagani	INFN
CNRS Institut de Physique Nucléaire d'Orsay (3)	CNRS-IN2P3-Orsay	F	T. Garvey	T. Junquera	CNRS
CNRS Laboratoire de Physique Subatomique et de Cosmologie (3)	CNRS-LPSC	F	T. Garvey	J.M. De Conto	CNRS

Main Objectives: Research and Development of the technology for high intensity pulsed proton linear accelerators up to an energy of 200 MeV.

Cost:

Total Expected Budget	EU Funding
12 M€ (FC) + 2.7 M€ (AC) **Total 14.7 M€**	**3.6 M€**

1 **Management Activity** 3
1.1 Meetings 3
1.2 External Scientific Advisory Committee 3
2 Dissemination Activity 6
2.1 List of talks 6
2.2 List of papers 6
2.3 Web site 6
3 Additional staff hiring 6
4 Status of the Work 8
4.1 Work Package 1 : Management and Communication 8
4.2 Work Package 2: Normal Conducting Accelerating Structures 8
4.3 Work Package 3: Superconducting Accelerating Structures 17
4.4 Work Package 4: Beam Chopping 24
4.5 Work Package 5: Beam Dynamics 27

1 MANAGEMENT ACTIVITY

1.1 Meetings

1.1.1 List of meetings

The list of events concerning HIPPI during the year 2004 is shown in Table 1.1.1a. More details are given in Table 1.1.1b (web-site or address of the minutes).

1.1.2 General meeting

The HIPPI general meeting in 2005 will be hosted by CCLRC (RAL) in Cosener's house, in the period September 28-30.

1.2 External Scientific Advisory Committee

Measures have been taken following the ESAC recommendations:

- Links between work packages 4 and 5 have been tightened, with these work packages having overlapping workshops in the same place on April 13-15.
- A special task force has been created to address the DTL issues; it has already met 3 times (2/12/2004, 10/02/2005, 7/04/2005) and significant progress has been achieved concerning the DTL design (more details in the WP2 section).

Table 1.1.1a: Overview of meeting, workshop and event (co)organized by the Activity or with Activity contributions

	Jan.	Feb.	March	April	May	June	July	Aug.	Sept.	Oct.	Nov.	Dec.
CARE & HIPPI												
CSC meetings				5 CERN					5 & 6 Paris			
Workshop WP2						2 &3 CERN						
Workshop WP3			13 & 14 INFN-Mi									
Workshop WP4				13 &14 RAL								
Workshop WP5				14 & 15 RAL								
HIPPI yearly meeting									28 till 30 RAL			
CARE yearly meeting											23 till 25 CERN	
Other workshops												
with BENE (CARE)						20 till 24 Frascati			??? Frascati			
with H3 (CARE)												
High Power SC Linac					23 till 25 FNAL							
Other collaborations												
IPHI-SPL	27 & 28 CERN									??? IPNO		
Russia (ISTC)				18 till 22 Russia								
Miscellaneous												
INTC										10 till 14 CERN		
PAC05					16 till 20 Knoxville							
ICIS05									12 till 16 Caen			

Table 1.1.1b: List of meeting, workshop and event (co)organized by the Activity

Date	Title/subject	Location	Main organizer	Number of participants	Comments and Web site
January 27-28	6th IPHI-CERN collaboration meeting	CERN (CH)	CERN	31	Talks and minutes
March 13-14	2nd workshop of HIPPI WP3	INFN Milano	INFN Milano	17	Talks and minutes

2 DISSEMINATION ACTIVITY

2.1 List of talks

No relevant talks were presented during the first quarter of 2005.

2.2 List of papers

No international conference or workshop took place during the first quarter of 2005 and this explains why there were no papers in the HIPPI-Conference series during this period. The paper number 1 in the following list corresponds to a milestone in the HIPPI planning, and has been published in due time.

Table 2.2: List of document issued by the NA or JRA

#	CARE document type and number	Title	Authors and Labs	Date
1	CARE-Note-2005-001-HIPPI	Report on Cavity A (TRASCO Z502) Fabrication and Tests	A. Bosotti, C. Pagani, P. Pierini, P. Michelato, R. Paulon - INFN Milano, G. Corniani, (ZANON), J. P. Charrier, B. Visentin, Y. Gasser, J. P. Poupeau, B. Coadou - CEA	01/2004
2	CARE-HIPPI-Document-05-001	An investigation of different methods to simulate the cavity-to-waveguide coupling	R. Wegner, M. Vretenar - CERN	01/2004
3	CARE-HIPPI-Document-05-002	RF design of a DTL power coupler	P.E. Bernaudin - CEA	02/2004

2.3 Web site

The HIPPI web site (**http://mgt-hippi.web.cern.ch/mgt-hippi/**) contains the most recent information on the JRA activity.

3 ADDITIONAL STAFF HIRING

Two persons have been hired on previously posted jobs (CCLRC and GSI) and one new position has been open (CEA). See Table 3.

Table 3: Temporary staff hiring

#	Lab	Job Type	Duration	Work subject	Status
3	GSI	Staff	3 years	Beam Dynamics (supervisor: W. Barth / I. Hofmann)	Starting May 2nd, 2005
4	CCLRC	Student	3 years	Beam dynamics and RF (supervisor: C. Prior)	Hired
5	CEA	Staff	2 years	SC RF test stand (supervisor: S. Chel)	Published

4 STATUS OF THE WORK

4.1 Work Package 1 : Management and Communication

Significant efforts have been invested during the first two months of 2005 to finalize the first annual report with all the necessary technical and financial information.

At the same time, a reminder has been sent to the Work Packages coordinators, highlighting the deliverables and milestones in 2005.

The HIPPI steering committee has met two times by phone conference.

Actions have been taken to implement the relevant ESAC recommendations (see section 4.2).

4.2 Work Package 2: Normal Conducting Accelerating Structures

4.2.1 DTL and coupling port design at CEA Saclay and LPSC (subtasks 2.1.3, 2.1.5)

As planned, the RF design of the coupling port for 1 MW RF power has been performed by CEA Saclay. The final design uses a standard, half height waveguide terminated by a short circuit and coupled to the tank by a “evanescent waveguide” of rectangular shape. The distance between the short circuit and the “evanescent waveguide” dictates the coupling factor. Therefore, by changing the position of the short circuit, one can adjust the coupling factor, by example to be adapted for different accelerating field levels or beam currents.

The influence of the power coupler on the shunt impedance of the tank has been verified. No decrease in shunt impedance could be observed, which indicates that the effect of the PC is lower than the RF code precision.

The thermal load and its geometrical repartition on the coupler has been computed both for the full reflection and full transmission cases, the practical running point lying somewhere in between, as close as possible form the 100% transmission case. The power to be used for the thermo-mechanical design is the one corresponding to the 100% transmission case with a 20% safety margin, leading to losses of some 3.5 kW cw.

Thermal calculations are under way at LPSC as well as the mechanical design. These thermal calculations have shown that acceptable temperatures are achievable and the cooling system is under design. The goal is to get the final design specifications by the end of May 2005. They will be validated within the HIPPI team before june 2005 and will be transmitted to the Russian team for the DLL tank construction. In parallel, the construction of the adjustable wave guide will start at LPSC. The activity is then on time.

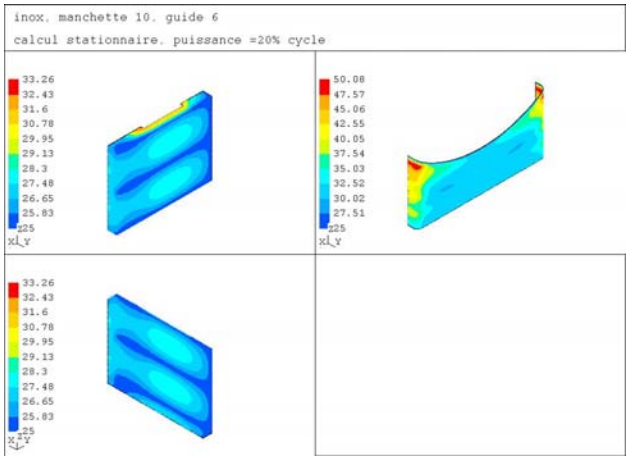

Figure 4.2.1: Thermal calculations on the coupling port and the wave guide.

4.2.2 DTL general design (subtask 2.1.1)

A DTL Task Force has met three times at CERN between December 04 and April 05. Its goal is to set up a team of experts in order to converge to a modern optimised design for the DTL of Linac4, providing a stronger coordination of ongoing activities and a closer guidance to the construction of the DTL Tank1 "working prototype" that is now starting in Russia. A new beam dynamics design has been defined, with higher accelerating gradient (3.3 and 3.5 MV/m), no field ramp in the first tank, FFDD focusing in Tank1 and FD in the following tanks. Correspondingly, the RF design has been recalculated, keeping peak field below 1.7

Kilpatrick and maximum peak power out of the klystrons below 750kW. The Tank1 layout resulting from this work has been sent to ITEP (Moscow), and will be followed for the mechanical design of the Tank. The Permanent Magnet Quadrupoles have been further studied at CERN, in particular for the effect on beam of errors and multipoles.

Activities at Rutherford Laboratory (RAL*)*

Ciprian Plostinar was hired from the HIPPI money on a 3-year contract and started working on March, 29th

A new RAL chopper line design has been made that reduces the voltage requirements for the fast chopper by ~20-30% and for the slow chopper by ~65%. The new line uses 2 dumps to collect the deflected beam from the slow and the fast chopper (Figure 4.2.3a). In the old design the deflected beam of both, fast and slow choppers, was collected on the plates of the slow chopper. Furthermore, the new design features relaxed parameters for all elements: larger apertures for beam pipes, quadrupoles, and RF cavities, and larger distance between the chopper plates. Due to the reduced chopper voltages it is now possible to use 3 MeV as energy for the chopper line instead of the former 2.5 MeV. The beam dynamics simulations have been done with IMPACT, ML/I (MaryLie/IMPACT), and PATH (Figure 4.2.3b). Some effort is used to "debug" ML/I, which is still under heavy development by RD Ryne (LBNL), and to adapt it to the required simulation task.

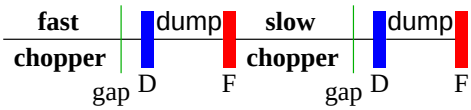

Figure 4.2.3a: Basic design of the chopper line

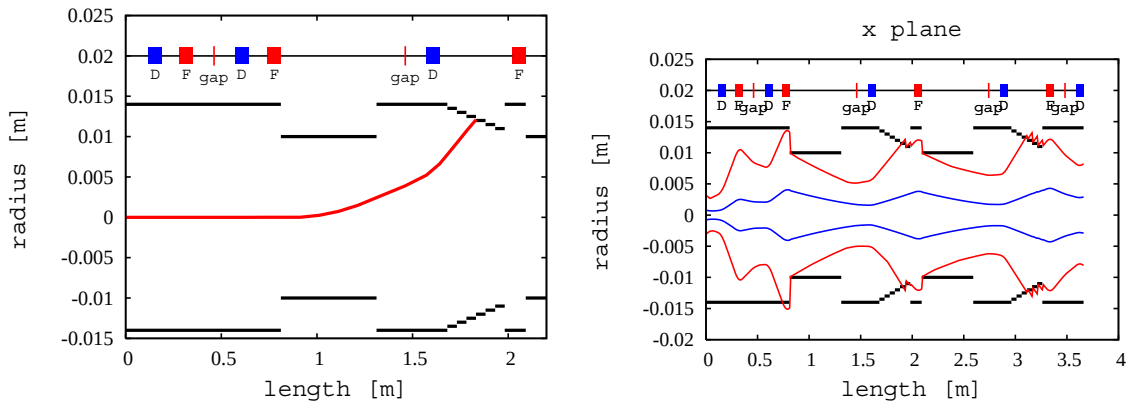

Figure 4.2.3b: Deflection of the beam centroid (left) and beam envelopes (right)

The buncher cavities for the new chopper line have been redesigned and now need approximately 1/3 of the original power requirements. The DTL-type design with incorporated quadrupoles has been changed to a CCL-type design as it is used at CERN and SNS (Figure 4.2.3c).

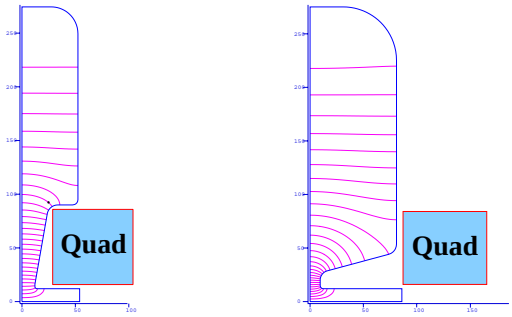

Figure 4.2.3c: Buncher cavities. DTL type (left) and CCL type (right).

After 3 meetings with Toshiba on 324/972 MHz pulsed klystrons, 324 MHz has been selected for the RF frequency in the RAL front-end test stand. This implies a redesign of the RAL 180 MeV linac on the basis of this choice. However, a meeting with representatives of Thales is still planned in April to reconsider the possibility of using 352 MHz pulsed klystrons.

The RAL front-end test stand is now a collaboration with monthly meetings between the following groups:

- ISIS accelerator division, RAL
- ASTeC intense beams group, RAL
- Warwick University
- Imperial College, London

A new web-site for the RAL front-end test stand has been set-up using the professional content management system "plone" (http://fets.isis.rl.ac.uk).

The same software was used to set up sites for the WP4/WP5 workshops at RAL (http://conftest.isis.rl.ac.uk) .

4.2.3 Side Coupled Linac (LPSC) (subtask 2.3.2)

As indicated before, a delay is due to the lack of the PhD student foreseen for the activity at LPSC. The slow down of the other activities at LPSC, leading to some availability of the RF engineers will solve partially this problem.

Nevertheless, analytical studies, as well as simulations, have been made to calculate the sensitivity of the system versus the mechanical errors due to the machining. Analytical studies have shown the scaling laws of the field fluctuations versus the mechanical tolerances. A simulation tool, developed with the formal code Maple, has confirmed these results and has given the numerical values of the sensitivities. In parallel, RF calculations have been made to evaluate the requirements for a tuning ring. Solutions exist, without leading to too complicated structures. A final choice has now to be done on the choice of the optimum coupling factor and the final drawing of the cavity has to be made. This must take into account:

- The really achievable mechanical tolerances. The main impact is on the cost.
- A proper balance between a small coupling factor and a good shunt impedance. The higher the coupling factor, the lower the sensitivity to errors, but the lower the shunt impedance.

A long period student (4 months) that started mi-April at LPSC in the mechanical group is in charge of the mechanical design and thermal studies. They are based on a 3% coupling factor and the thermal calculations have now started.

4.2.4 CCDTL (CERN) (subtasks 2.4.1, 2.4.2, 2.4.3)

The CCDTL pre-prototype in construction at CERN has been successfully copper plated between the last weeks of 2004 and the first weeks of 2005. The long preparation proved to be valuable, the first half tank being successfully plated at the second attempt, and the second one at the first attempt. The different components have been delivered (Figure 4.2.4) and the pre-prototype is being assembled in the mechanical workshop of the CERN AB-RF Group where the first RF measurements will be made. The support has been received, and the drawings of the RF input coupler have been finished and sent for production. In parallel to the pre-prototype preparation, the layout of the CCDTL for CERN Linac4 has been re-optimised for a higher accelerating gradient (shorter linac and lower cost) and for maximum peak power of 750 kW from each klystron, for a 40 mA beam current. An analysis of the beam centroid motion in the presence of alignment errors of RF gaps and quadrupoles has confirmed that the beam is about one order of magnitude less sensitive to errors in the gap positioning than to errors in quadrupole positioning. The conclusion was that machining and positioning errors as high as ± 0.3mm can be tolerated. The number and type of ports and the details of the support for the CCDTL prototype that will be built in Russia have been defined together with the Russian partners. The mechanical drawings, already well advanced, are being finalised and construction is about to begin.

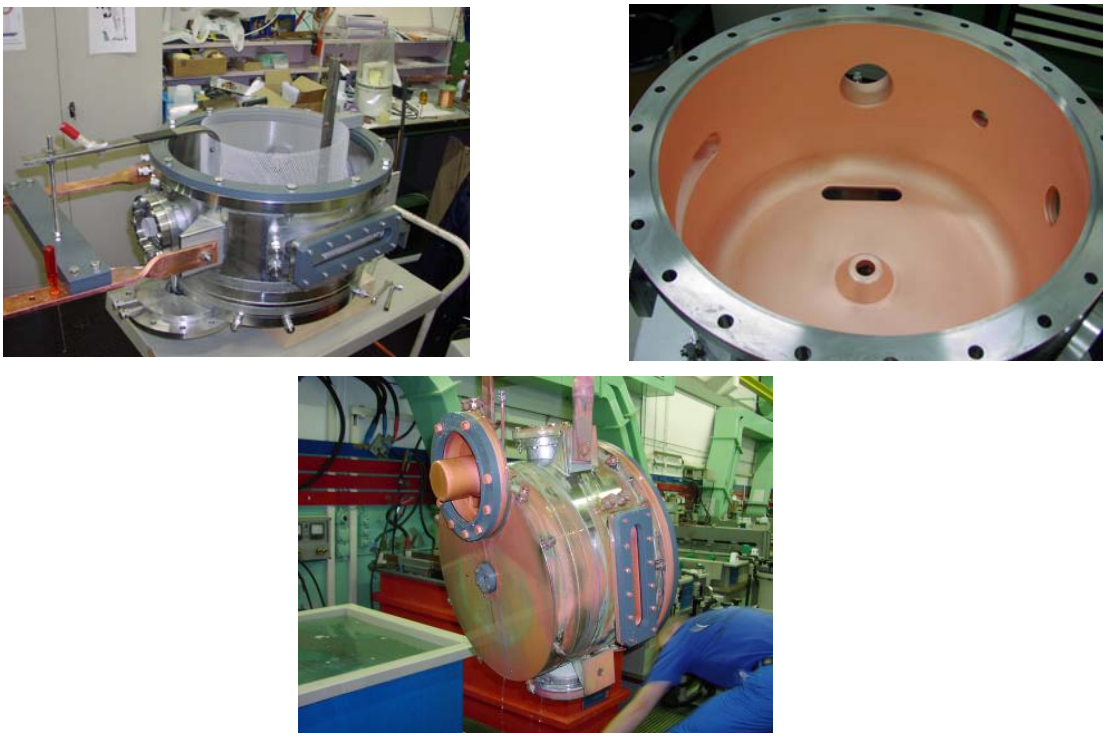

Figure 4.2.4: Copper-plating of CERN CCDTL Pre-prototype

4.2.5 H-mode DTL (IAP Frankfurt) (subtasks 2.2.2 – 2.2.8)

Beam dynamics design

Compared to previous design results for the GSI FAIR facility Proton Linac, the RFQ-DTL matching section (MEBT) has been modified, according to the new RFQ output particle distributions.

The new design includes now a short quadrupole singlet lens, followed by a short rebuncher and finally a quadrupole triplet at the entrance of the first CH-DTL. Full structure calculation at 95.7 mA shows the definitive possibility to accept 3 MeV as initial energy together with good quality of the beam : at 70 MeV the transverse normalised emittance is lower than 7 mm mrad and the longitudinal is below 17 KeV ns, which are the reference values for the FAIR Project at GSI.

RF cold model design & construction

There is still a lack in experience with this novel type of accelerator. Therefore a cold model cavity consisting of 8 equidistant gaps will be built, in order to test the fabrication steps and find out technical solutions for the assembly of the prototype cavity (Figure 4.2.5a).

The Microwave Studio software has been used to optimize the main parameters of the model cavity (resonance frequency, flatness, shunt impedance).

The large end cells will host the quadrupole lenses and beam diagnostic devices. The tuning of the cavity is optimised for a flat distribution of the axial field as shown in Figure 4.2.5b. Model construction has been started and should be finished until mid 2005. Further details will be communicated at the PAC 05 conference.

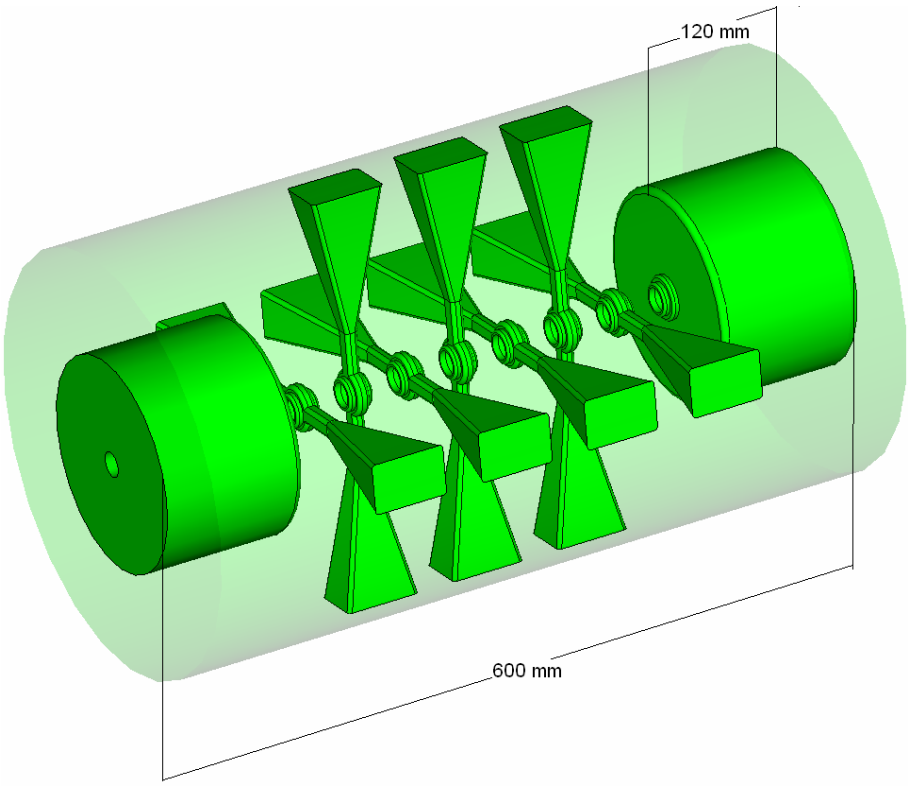

Figure 4.2.5a: Microwave Studio Design of a 8 gap cold model dedicated for manufacturing and assembly studies

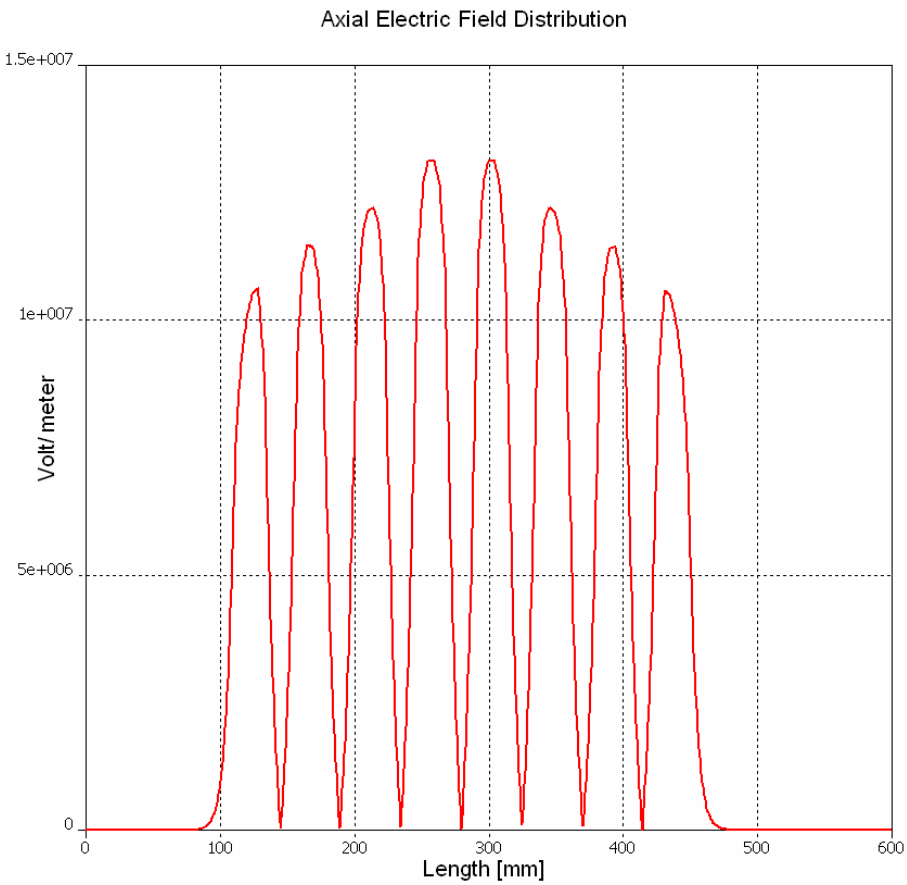

Figure 4.2.5b: First Microwave Studio results on electric field flatness tuning of the 8 gap cold model cavity

Table 4.2a : Status of the Sub tasks in WP5 which are supposed to have started according to the MS project breakdown in Annex 1

WBS #	Title	Original begin date (Annex 3)	Original end date (Annex 3)	Estimated Status	Revised end date
2.1	**Drift Tube linac**				
2.1.1	DTL Design	July 2004	June 2007	On time	
2.1.2	Decision on prototyping	April 26, 2004	April 26, 2004	Done	September 2004
2.1.3	Prototype component development	May 2004	June 2007	On time	
2.1.4	DTL beam dynamics design	January 2004	June 2008	On time	
2.2	**H mode DTL**				
2.2.1	RF model CH tank 1, RF design	January 2004	August 2004	Irrelevant	
2.2.2	RF cold model design & construction	January 2004	January 2005	55 %	December 2005
2.2.3	RF model construction	December 2004	June 2005	25%	June 2006
2.2.4	Beam dynamics design CH tank 1	January 2004	June 2004	85 %	June 2005
2.2.5	CH model cavity tests	January 2005	December 2005	On time	
2.2.6	CH prototype design	January 2005	October 2005	On time	
2.2.8	CH DTL beam, dynamics study	January 2005	June 2005	50 %	
2.3	**Side Coupled Linac**				
2.3.1	RF model, RF design	January 2004	July 2004	30 %	Delayed
2.3.2	RF model mechanical design	July 2004	December 2004	30 %	Delayed
2.4	**Cell Coupled DTL**				
2.4.1	Pre-prototype construction	January 2004	June 2004	Done	
2.4.2	Pre-prototype high power RF tests	July 2004	March 2005	Start delayed to March 2005	October 2005
2.4.3	Prototype mechanical design	January 2005	June 2005	50 %	

Table 4.2b: Status with respect to the interim reports and deliverables due in 2005 according to the MS project breakdown

WBS #	Title	Due date in Annex 1	Status	Revised delivery date
2.2.5	Test of CH model cavity: intermediate report	December 2005	On time	
2.2.8	Design report on beam dynamics in the CH-DTL	June 2005	On time	
2.4.1	Construction of CCDTL pre-prototype: intermediate report	June 2005	On time	

4.3 Work Package 3: Superconducting Accelerating Structures

The annual HIPPI-WP3 meeting was held on March 14-15 in LASA (INFN-Milan). Presentations and minutes are on the HIPPI-WP3 web site [http://hippiwp3.in2p3.fr/].

INFN-Milano

Local organization of the annual HIPPI-WP3 meeting held on March 14-15 in LASA.

Cavity A vertical test (subtask 3.1.1)

The report associated to the completion of Task 3.1.1 ("Cavity A vertical tests") has been issued and published on the CARE site as CARE note-2005-001-HIPPI.

Mechanical design of tuner (subtask3.1.2) and Integration of piezo design (subtask 3.1.3)

These tasks for the design of a fast/slow coaxial tuner have been started and are at approximately 20% completion. The work is in parallel with JRA1(SRF)/WP8, where a similar tuner is investigated for the 1.3 GHz cavities. Prototypes of coaxial tuners (without the piezo-assisted fast tuning capability) have been successfully operated at DESY during the SuperStructures tests at the TTF (Figure 4.3.2a).

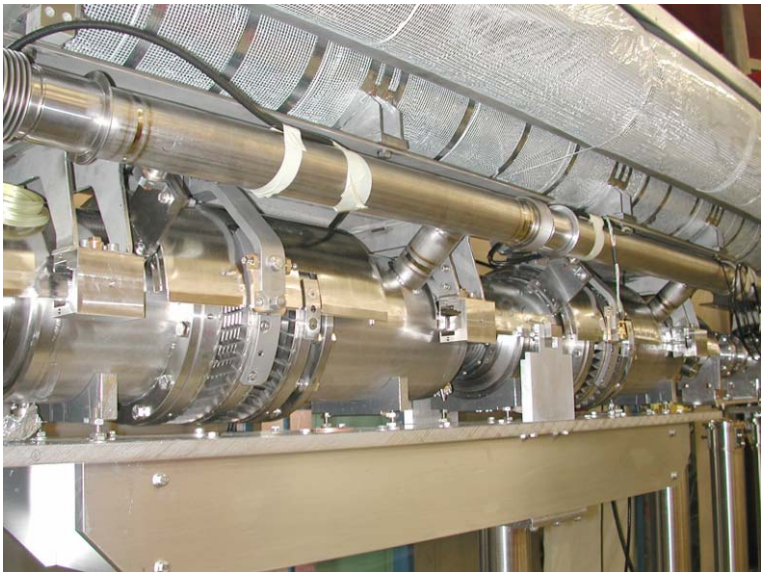

Figure 4.3.2a: Tuning system on a TTF superstructure

A fast tuning action, for the Lorentz force compensation under pulsed operation, has been now integrated on the coaxial tuner concept, as shown in Figure 4.3.2b. The two red rectangular elements are the piezo actuators, preloaded by the cavity elasticity, that allow the fast tuning capability. Activities for the investigation of commercially available piezoelectric elements at cryogenic temperatures are well underway in various laboratories, including Milano, in the context of the JRA1/WP8 activity. The HIPPI tasks mentioned before will benefit from the outcome of these activities in order to set the final tuner design on the basis of needed preload conditions and stroke reduction at cryogenic temperatures.

A complete structural model of the 3D behaviour of the tuner-cavity-helium tank system is being devised in order to completely characterize the system and to set up proper FE models to assess displacements/stresses in operating conditions.

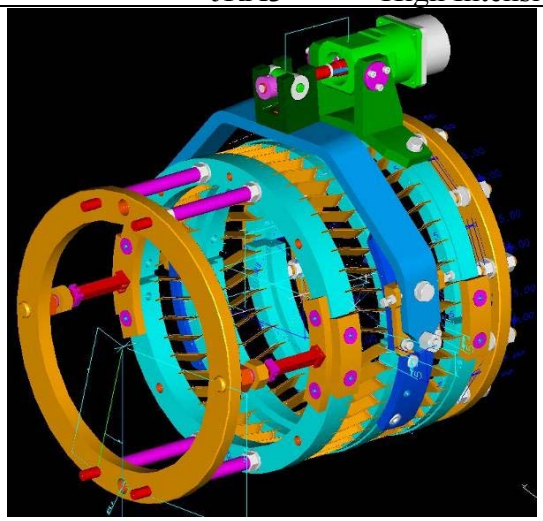

Figure 4.3.2b: Tuning system: 3D model

Starting from the analyses performed on the 1.3 GHz tuning system, we have started the scaling to the dimensions of the TRASCO Z502 cavity (Cavity A), as shown in Figure 4.3.2c. A fine tuning of the overall system is now being conducted and FE models of the 700 MHz tuner are being developed for complete characterization of the system.

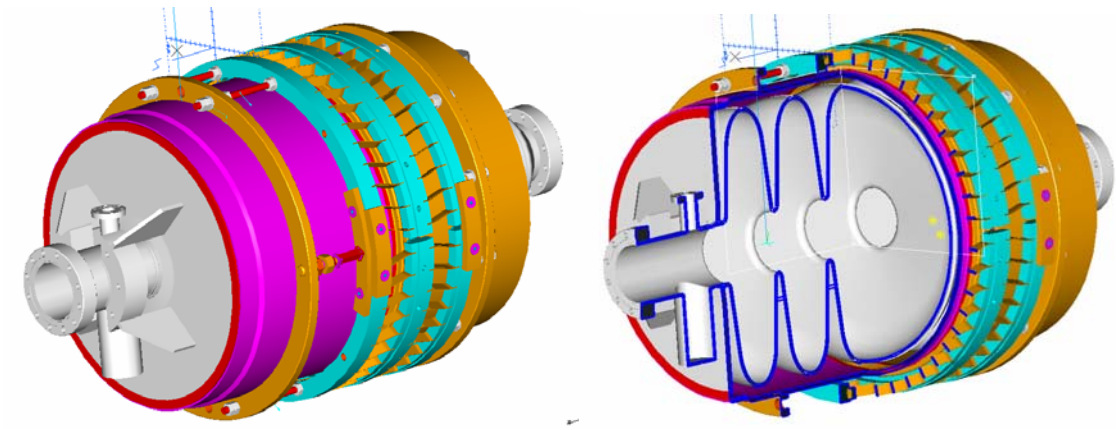

Figure 4.3.2c: Tuning system for the Cavity A

CEA-Saclay

Organization of the annual HIPPI-WP3 meeting held on March 14-15 in LASA.

Design of cavity B (subtask 3.1.5)

Cavity B, the second elliptical cavity of the program, is a 5-cells 704.4 MHz with a beta=0.47. This cavity will be equipped with a 1MW coupler developed in the same program, which needs to choose a 100 mm diameter coupling port and a beam tube diameter of 130 mm. We investigate two different geometries: with asymmetric tubes (resp. 130mm and 65 mm diameters) and the same conical beam tubes (130 mm diameter ending by 65 mm flanges). For both geometries the main parameters (R/Q, Ep/Eacc and Hp/Eacc) are very similar. However, considering the RF frequency shift due to Lorentz force detuning, the symmetric solution is better since the lowest mode at 90 Hz disappears completely (Figure 4.3.3a).

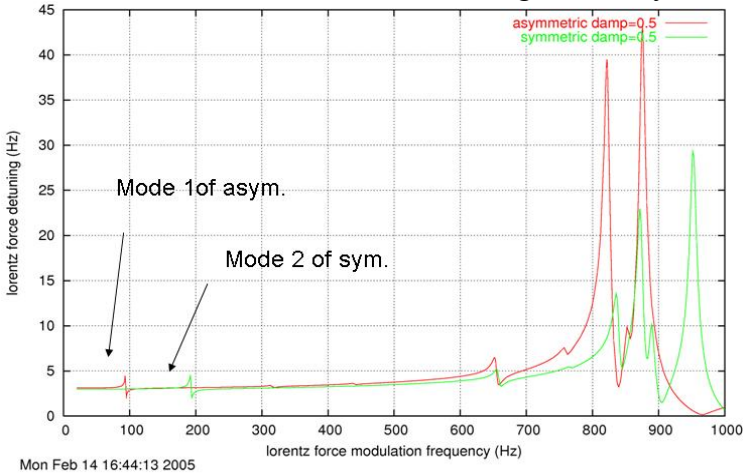

Figure 4.3.3a: Transfer function for Lorentz detuning of cavity B with helium tank

The helium tank is designed to insure an efficient cooling of the power coupler port as well as of the corresponding beam tube (Figure 4.3.3b). Moreover, for the acceptance tests at room temperature of the helium tank, the cavity must sustain a pressure of 2.6 bars. Two sets of stiffening rings (welded on the half cells) are therefore needed in order to limit the cavity stress to acceptable values (< 40 Mpa). The outer ring has a strong effect on the mechanical modes spectrum and, when choosing the optimal radius, the frequencies of the first mechanical modes are increased and the corresponding Q's are lowered. Calculations of static Lorentz detuning for a 4 mm cavity thickness show that for a global stiffness (tuner + helium tank) around 100 kN/mm, a LFD coefficient under 4Hz/(MV/m)^2 can be reached.

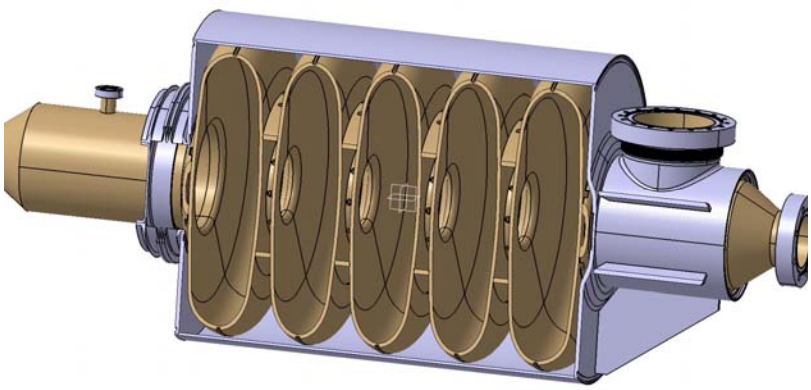

Figure 4.3.3b: Sketch of cavity B with helium tank and coupler port

Power coupler design and engineering (subtask 3.1.7)
The goal of this task is the design and test a 1MW power coupler. Though this power level is not necessary for the beta 0.5 elliptical cavity, the same coupler, if properly working, could be used with all the different elliptical cavities of the linac (particularly in the high energy part). In the SNS and KEK designs, the coupler is equipped with one coaxial warm window and the coaxial part of the coupler is cooled with helium gas. We adopted the same basics, mainly because it leads to the simplest design. RF optimization of a 704 MHz coaxial window is done. The bandwidth is large enough, and Qex lower than 10^6 can be reached with a 130 mm diameter beam tube if the iris/coupler distance is kept below 50 mm. The thermal calculations for the window and the coaxial part are now being pursued.

RF source order and preparation (subtask 3.1.8)
The commercial procedure for the supply of a 1MW klystron is almost concluded. The order is expected to be formally out next June. The delivery is expected to take between 12 and 16 months, still in discussion with the companies. The plan is to order the circulator at the same time, but this element is not critical since it could be delivered six months later.

Modulator preparation for the 700 MHz test stand (subtask 3.1.10)
The study of the HV generator is in progress. The technical proposals for the klystron show that the required peak RF power of 1MW can be reached with a klystron gun voltage below 95kV, which is of major importance since the existing HV pulsed generator can be used. The needed modifications of this generator to get the 10% duty cycle are manageable, the main part being the modification of the HV power supply. Once the klystron parameters are known, we will fix the design of the HV pulsed generator. The final design will be available in next October.

FZJ
No contribution has been received on time for this report.

Test stand preparation (subtask 3.2.1)
Evaluation of 700 MHz resonator (subtask 3.2.2)
3.2.6 RF design of 352 MHz multigaps resonator (subtask 3.2.6)

IPN-Orsay

Evaluation of 352 MHz 2-gap prototypes (subtask 3.2.3)
The beta 0.15 Two Gaps Spoke Cavity prototype has presently entered into the surface preparation phase (chemical polishing and high pressure rinsing). The tests at low temperature (4K) will follow beginning of April 2005. After preliminary fabrication checks (vacuum leaks, thickness control, …) frequency measurements at room temperature have confirmed a good fit with geometry specifications (Figure 4.3.10): a shift of 300 KHz was measured (f_0 = 352 MHz).

Figure 4.3.10: 2-gaps spoke cavity at Orsay

During the cold test in April 2005, the overall performances will be measured, and a particular experimental program related to the main concerns of the HIPPI project is foreseen: Lorentz forces, microphonics, tuning sensitivity, etc. In June 2005 the stainless steel helium tank will be welded and tested.

Design of coupler prototype (subtask 3.2.4)
The study of the coupler prototype has progressed during the last months. Following a preliminary design study, detailed drawings of the mechanical components and test cryostat installation have started in March 2005. The main goal is to order the ceramic window system in June 2005.

RF design of multigap spoke resonator (subtask 3.2.6)
In the frame of the design study concerning the multigap spoke cavity proposed by the Juelich group, some cross-check calculations have been performed at IPN Orsay using CATIA and CASTEM codes. Different mechanical structure characteristics were evaluated, in particular the maximum stress and the vibration modes.

IAP-FU

CH resonators (subtask 3.3)
Design of tuning system for superconducting CH cavities (subtask 3.3.1)
The superconducting CH-prototype has been stabilized with stiffener rings because mechanical simulations performed with ANSYS showed a deformation of the cavity under 1 bar of pressure. After the welding of the rings the cavity has been successfully vacuum tested (Figure 4.3.13a). The field distribution has been measured and compared with Microwave Studio simulations. The field is flat and the comparison between experiment and theory is very good.
Then the cavity has been chemically treated with a procedure called Buffered Chemical Polishing (BCP) to remove about 0.1 mm of the inner surface. After high pressure water rinsing to remove dust particles from the surface, couplers have been installed in a clean room. Now the cavity is ready for conditioning with high power a room temperature to reduce possible multipacting barriers.

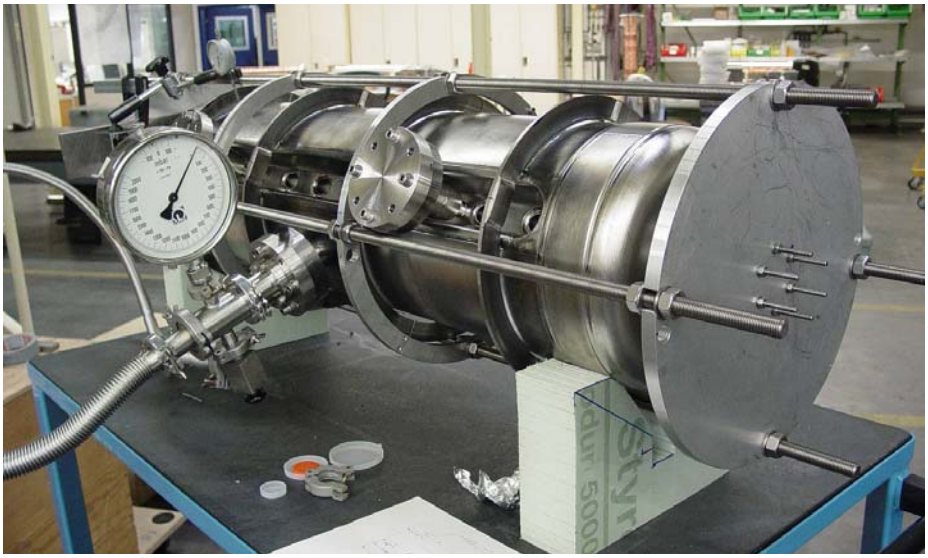

Figure 4.3.13a: The CH-cavity during a vacuum test before the chemical treatment

The analysis of the CH-cavity has been performed to test the model predictions for peak stresses, deflections and flange reaction forces under vacuum loads in room temperature as well as cryo-temperature conditions. An important part of simulations is devoted to the determination of resonant structural frequencies. The simulation results should help to evaluate the required cavity layout in the cryostat environment. All simulations have been made with ANSYS 9.0 multi-physics code. To reduce the CPU time we used 1/4 symmetric boundary condition and a special fix point. The simulations are necessary to find the best way to fix the cavity in the cryostat in order to eliminate the mechanical modes in the 10-90 Hz range. The first 5 eigenmode frequencies (112.3, 285.8, 290.6, 501.4 and 562.3 Hz) of the sc CH-cavity under vacuum and cool-down are all above the critical frequency range. Modes 2 to 5 are illustrated in 3D cut views in Figure 4.3.13b. The first eigenmode is understood as an artificial mode, which is not showed.

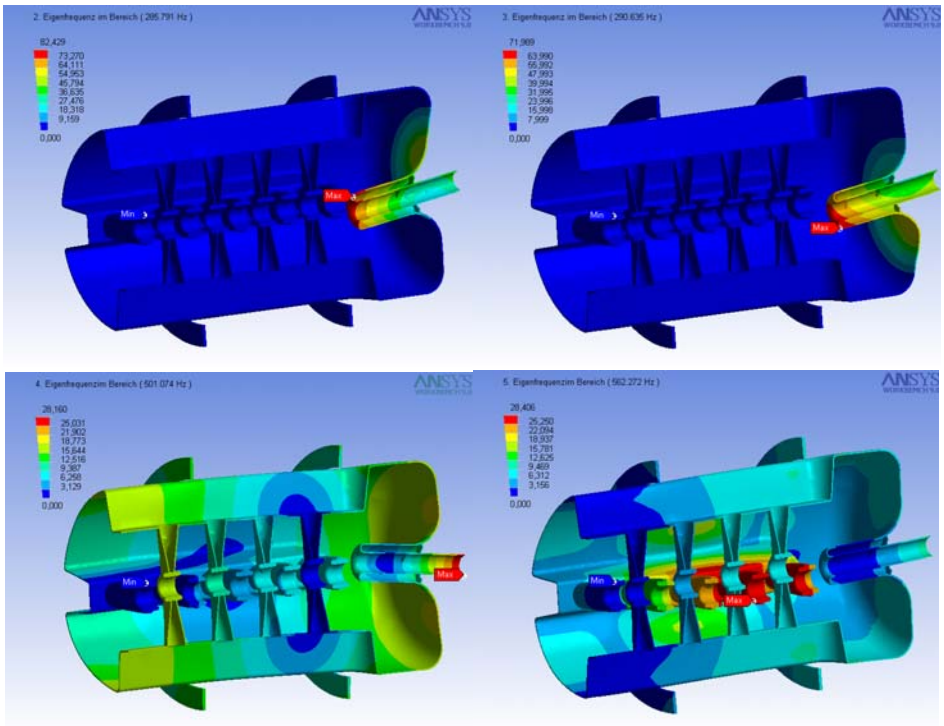

Figure 4.3.13b: 2nd, 3rd, 4th and 5th mechanical modes of the sc CH prototype cavity

In April 2005, the conditioning of the CH-cavity is foreseen. In May, it is planned to perform the first cold test in the new physics building. Further ANSYS simulations will be performed to calculate:

- the frequency shift for a given external force
- the cavity deformation and material stress for a given external force.
- the frequency shift during cool down
- the frequency shift due to Lorentz force detuning

The next milestone is an intermediate report on cold tests of the s.c. CH-prototype cavity and conceptual layout of the suitable tuner system. Because of the moving to a new physics building in Frankfurt, the tests are delayed by two months. The milestone is shifted from June to September 2005.

Table 4.3a : Status of the Sub tasks in WP5 which are supposed to have started according to the MS project breakdown in Annex 1

WBS #	Title	Participants	Original begin date	Original end date	Estimated Status	Revised end date
3.1	**Elliptical cavities**					
3.1.1	Cavity A vertical tests	INFN, CEA	01 / 2004	12 / 2004	Done	
3.1.2	Tuner design	INFN	07 / 2004	12 / 2005	20%	
3.1.3	Integration of piezo design	INFN	07 / 2004	12 / 2005	20%	
3.1.4	Tuner construction and testing	INFN	01 / 2006	06/2006		
3.1.5	Design cavity B	CEA	07 / 2004	10 / 2005	70%	
3.1.6	Construction cavity B	CEA	11 / 2005	06/2006		
3.1.7	Power coupler design & engineering	CEA-LPSC	01 / 2005	04/2006	10%	
3.1.9	RF coupler construction	CEA-LPSC	01 / 2006	10/2006		
3.1.8	RF source order and preparation	CEA	07 / 2004	09/2006	35%	
3.1.10	Modulator preparation for test stand	CEA	01 / 2005	05/2006	25%	
3.2	**Spoke cavities**					
3.2.1	Test stand preparation at FZJ	FZJ	04 / 2004	08 / 2004	Done	
3.2.2	Evaluation of 700 MHz prototype	FZJ	09 / 2004	09 / 2005	80 %	
3.2.3	Evaluation of 352 MHz 2 gaps-proto	IPNO	06 / 2004	06 / 2005	70 %	
3.2.4	Design of coupler prototype	IPNO	01 / 2004	12 / 2005	20 %	06 / 2006 ?
3.2.5	Realization and test of coupler proto.	IPNO	01 / 2006 ?	?		
3.2.6	RF design of 352 MHz multigaps-res.	FZJ-IPNO	01 / 2004	04 / 2005	80 %	
3.2.7	Engineering of resonator coupler tuner	FZJ-IPNO	05 / 2005	06 / 2005		
3.2.8	Final design of 352 MHz n-gaps res.	FZJ-IPNO	07 / 2005			
3.3	**CH resonators**					
3.3.1	Design of tuning system	IAP-FU	01 / 2004	06 / 2006	55 %	

Table 4.3b: Status with respect to the interim reports and deliverables due in 2005 according to the MS project breakdown

WBS #	Title	Due date in Annex 1	Status	Revised delivery date
3.1.4	Cavity A tuner: intermediate report	December 2005	On time	
3.2.2	Report on evaluation of 760 MHz prototype	March 2005	Results available. Under writing	April 2005
3.2.3	Report on evaluation of 352 MHz 2gaps-proto	October 2005	In time	
3.2.6	Design report on 352 MHz n-gaps resonator	May 2005	On time	
3.3.1	Report on CH tuners	June 2005	Delayed (moving to a new laboratory – see text)	September 2005

4.4 Work Package 4: Beam Chopping

Web-site: http://lombarda.home.cern.ch/lombarda/WP4/WP4main.htm

Also during this first quarter of the year 205 the work of WP4 is progressing steadily, notwithstanding some difficulties at CERN due to lack of drawing office support (low priority with respect to other projects).

The annual meeting of Work Package 4 was hosted by the CCLRC Rutherford Laboratories at the Cosener's House. It was hold during 3 days (13-15 April) in conjunction with WP5. Informations about the meeting, including links to all the presentations, can be consulted at http://conftest.isis.rl.ac.uk/Programme/wp4/.

This joint event with WP5 was extremely beneficial: it gave the occasion to chopper hardware specialists and beam dynamics experts to exchange ideas and concerns. In particular the beam dynamics in the chopper line was analysed in the wider context of the whole acceleration system till 200 MeV, as recommended by the ESAC advisory committee. Progress along those lines (simulating the effect of the chopper line much further down the line) is evident. The CERN chopper line has also been chosen as a candidate for a test benchmarking in WP5.

The goals of the WP4 meeting were the following:

- Status of the foreseen chopper performance,
- Discussion of the possibility to test the RAL chopper or some of its components on the 3 MeV test stand, to be commissioned at CERN in 2007-2008.

The results of the first goal are summarized in Table 4.4. Details are given in the following two dedicated sections.

For the second goal, the conclusion was that an engineering design of the RAL chopper line should be completed beforehand. The interest of a partial test of one of the chopper line components was also debated, taking into account the unavoidable resources it would drain.

Table 4.4: Chopper characteristics

	Chopper A (CERN)	Chopper B (RAL)	
	Fast	Fast	Slow†
Rise/fall time	< 2 nsec	≤ 2 nsec	≤ 15 ns
Max. rep rate	50 MHz	2.6 MHz	1.3 MHz
Max. voltage/target	250 V/500V	1400V / 2200V	≤ 6kV
Flexibility	Min 3 pulses	7 – 15 ns	200 ns – 100 us
Chopping effectiveness (calculated)	99.7%	99.0 %	
Emittance growth of the un-chopped beam	8%	8% (New 3 MeV MEBT design)‡	

† Simulation only. ‡ Effect of residual chopper fields not included

CERN:

1. Chopper structure (subtask 4.1.1): The hardware will be built for June05. Delays have been caused by the overload of the CERN drawing office.

2. Chopper driver (subtask 4.1.3): The chopper driver approach which was adopted initially has been completely revised and solid-state MOSFET instead of tube amplifiers are now being developed.. Preliminary results are encouraging (see table) and this new system should allow for a higher voltage than the initial target of 500 Volts per plate.

3. Dump (subtask 4.2.1): The procurement of the material for the dump construction has started

RAL:

1. Triggered by the re-definition of the RFQ frequency (changed from 280 to 324 MHz), and energy (increased from 2.5 to 3 MeV), the beam dynamics of the RAL chopper line has been completely reviewed. In particular the FODO-type optics (similar to CERN's) design has the positive consequence of lowering the required 'slow' transition chopper voltage from ~ 6.0 to ~ 2.0 kV, and providing a separate, dedicated beam dump.
2. Manufacture and test of the slow-wave pre-prototype modules has been delayed. However the conceptual designs are evolving and specialised parts have been identified. A radical re-design of the chopper beam optics is in progress (F. Gerigk / G. Bellodi) and it is probable that beam apertures will be increased. This change and the possible integration of the RAL structures in the CERN front end test facility may necessitate a significant re-design of the RAL structures. Time to completion for these items is estimated to be 4-5 months.
3. Testing of the 'Kentech' fast pulse generator cards, fitted with an upgraded ferrite material, has resulted in a successful outcome. Phase 1 and 2 cards are now fitted with the upgraded material, and the ESS pulse droop specification has subsequently been met. This system is now available at RAL for testing slow wave structures, with dual polarity pulses of up to 1.4 kV in amplitude.
4. Testing, of the 'slow' pulse generator system has been delayed. The design, drawing and checking phase has taken longer than expected. However it is hoped that the construction and testing phase will now move ahead rapidly. Time to completion for this system is estimated to be 4-5 months.

5. A fellowship for 3 years has been granted to **C. Plostinar**.

Table 4.4a : Status of the Sub tasks in WP5 which are supposed to have started according to the MS project breakdown in Annex 1

WBS #	Title	Original begin date (Annex 1)	Original end date (annex1)	Estimated Status	Revised end date
4.1	Chopper structure A (CERN)				
4.1.1	Pre-prototype construction	January 2004	June 2004	Start delayed to November 2004	June2005
4.1.2	Pre-prototype testing	July 2004	November 2004	Start delayed to January 2005	Dec 2005
4.1.3	Driver construction & testing	January 2004	December 2004	60 %	December 2005
4.1.4	Full scale prototype design	January 2005	June 2005	50 %	
4.2	Chopper line (CERN)				
4.2.1	Dump design	January 2004	June 2004	Done	
4.2.2	Dump construction	July 2004	June 2005	Start delayed	
4.3	Chopper structure B (RAL)				
4.3.1	Pre-prototype design and test	January 2004	June 2005	80 %	
4.3.2	Prototype design	January 2005	December 2005	25 %	

Table 4.4b: Status with respect to the interim reports and deliverables due in 2005 according to the MS project breakdown

WBS #	Title	Due date in Annex 1	Status	Revised delivery date
4.1.1	Chopper A design report	June 2005	On time	
4.1.2	Intermediate test report	March 2005		June 2005
4.2.2	Dump design report	June 2005	On time	
4.3.1	Chopper B intermediate report	June 2005	On time	

4.5 Work Package 5: Beam Dynamics

The 2005 WP5-collaboration meeting took place in Abingdon, UK, April 13-14, 2005. Eleven papers were presented covering all topics in WP5:
- 2 in diagnostics: Forck/Groening (GSI), Dietrich (FZJ)
- 7 in code development: Duperrier (CEA), Gerigk (RAL), Yaramishev (GSI), Sauer (IAP), Sargsyan (CERN), Senichev (FZJ), Vasyukhin (FZJ)
- 2 in code benchmarking (Groening, Franchi)

All groups reported visible progress since the annual meeting of September 2004. Detailed information is available on the web-site: http://conftest.isis.rl.ac.uk/Programme/wp5/
Except for a few exceptions, most activities are well in schedule and expect to provide on-time the deliverables for 2005/06. The status of the different activities are summarised in the following sections.

4.5.1 CEA

Code development (subtask 5.1.3)
Simulations with neutralization have been applied to solenoids and the IPHI LEBT; comparisons of PIC results with simple formula for rise times have been successful.

4.5.2 CERN

Code development (subtask 5.1.5)
Beam dynamics studies for a new design for the SPL DTL have resulted in a shorter structure with stronger focusing, also avoiding the coupling resonance.

4.5.3 FZJ

4.5.3.1 Code development (subtask 5.1.6)
The performance of the newly developed slot and slot-finger structure is studied and proposed as an effective structure for the low energy part of a full linac for HIPPI.

4.5.3.2 Diagnostics (subtask 5.3.7)
The test measurements with gas scintillation photons are in progress and aim at background reduction and improvement of resolution.

4.5.4 GSI

4.5.4.1 Diagnostics (subtask 5.3.1)
The beam induced fluorescence method tests have been successful and can now proceed to prototype testing. Construction of the bunch shape monitor is starting.

4.5.4.1 Benchmarking experiment (subtasks 5.1.4, 5.1.7)
Test experiments with different DTL tanks on/off in March 2005 have shown encouraging agreement with DYNAMION simulations (transverse emittances); measured transmission is still below the calculated one.

The code comparison is progressing towards including space charge in the UNILAC DTL structure simulations; first test results have been presented.

4.5.4.2 RFQ developments
DYNAMION modeling of RFQ matching section has predicted transmission improvements confirmed by experiment.

4.5.5 IAP-FU

Code development (subtask 5.1.2)
LORASR improvements to join benchmarking and space charge & halo studies are well under way.

4.5.6 CCLRC RAL

Code development (subtask 5.1.1)
For the chopper design the original ESS design has been successfully modified for new requirements and more flexibility.

4.5.7 LPSC

DTL beam dynamics studies *(subtask 5.1.7*)

In 2004, the HIPPI DTL task force was set-up at the initiative of CERN, as a part of the work package 5 in the field of beam dynamics. The task force aims to define the optimum DTL design for LINAC 4. LPSC was asked to study the sensitivity of the DTL to accelerating field and quadrupole alignment errors and define acceptable tolerances. The particle transport code TRACEWIN from CEA-Saclay was selected as a reference code for the beam dynamics simulations. The accuracy of the code results was examined as a function of various input parameters, such as the number of particles per bunch, the number of runs and the type of space charge routines. Analysis will soon be completed, so that the DTL design can be finalized by June. Cross-comparison with independent particle transport codes should be done to further validate TRACEWIN results. In particular, one could pay special attention to the simulation of space charge effects in order to fully optimize the code.

Table 4.5a : Status of the Sub tasks in WP5 which are supposed to have started according to the MS project breakdown in Annex 1

WBS #	Title	Original begin date (Annex 3)	Original end date (Annex 3)	Estimated Status	Revised end date
5.1	Code development				
5.1.1	Preparation, Dev. of 3D space charge routines, Testing	January 2004	June 2006	50 %	
5.1.2	LORASR development	January 2004	December 2005	60 %	
5.1.3	Transport in 3D map implementation	January 2004	December 2005	70 %	
5.1.4	Improvement, modeling high current	January 2004	June 2006	60 %	
5.1.5	Codes preparation for 3 MeV test stand	January 2004	December 2006	40 %	
5.1.6	Codes preparation for SC linacs	January 2004	December 2006	40 %	
5.1.7	Code comparison and benchmarking	January 2005		Started	
5.2	Experiment at UNILAC: preparation & simulations	January 2004	June 2006	30 %	December 2006
5.3	Diagnostics and collimation				
5.3.1	Profile measurement prototype design and construction (GSI)	July 2004	February 2005	Done	
5.3.2	Profile measurement testing (GSI)	March 2005	June 2006	20 %	
5.3.3	Non-interceptive bunch measurement design (GSI)	October 2004	June 2005	50%	
5.3.4	Halo measurement device design & construction (CERN)	January 2004	June 2005	80 %	
5.3.5	Beam profile monitor design (FZJ)	January 2005	June 07	10 %	
5.3.6	Collimators design (CERN)	January 2005	December 2006	Replaced by dump	

Table 4.5b: Status with respect to the interim reports and deliverables due in 2005 according to the MS project breakdown

WBS #	Title	Due date in Annex 1	Status	Revised delivery date
5.1.2	LORASR development: intermediate report	December 2005	On time	
5.3.5	Final report on Halo measurement device	June 2005	On time	

Appendix 1: Gantt chart at end of March 2005

ID	Task Name	Milestones	Deliverables
1	**WP2: NORMAL CONDUCTING STRUCTURES**		
2	**2.1 Drift Tube Linac**		
3	2.1.1 DTL design		
4	2.1.2 Decision on prototyping		
5	2.1.3 DTL coupler prototype design		
6	2.1.5 DTL coupler prototype construction and testing		
7	2.1.4 DTL beam dynamics design		
8	**2.2 H-mode Drift Tube Linac**		
9	2.2.1 RF model CH tank1 RF design		
10	2.2.2 RF cold model design & construction		
11	2.2.3 RF model construction		
12	2.2.4 Beam dynamics design CH tank1		
13	2.2.5 CH model cavity tests	Dec-05 Intermediate repor	
14	2.2.6 CH-prototype design		
15	2.2.7 CH-prototype construction		Dec-06: Prototype ready
16	2.2.8 CH-DTL beam dynamics study	Jun-05 Design report	
17	**2.3 Side Coupled Linac**		
18	2.3.1 RF model RF design		
19	2.3.2 RF model mechanical design		
20	2.3.3 RF model construction and testing		
21	**2.4 Cell Coupled Drift Tube Linac**		
22	2.4.1 Pre-prototype construction	Jun-05 Intermediate repor	
23	2.4.2 Pre-prototype high-power RF tests		
24	2.4.3 Contribution to ISTC prototype construction	Jun-06 Prototype ready	
25	2.4.4 Revision of design after prototype testing		Dec-06: Design report
26	**WP3: SUPERCONDUCTING STRUCTURES**		
27	**3.1 ELLIPTICAL CAVITIES**		
28	3.1.1 Cavity A vertical tests		
29	3.1.2 Tuner design		
30	3.1.3 Integration of piezo design		
31	3.1.4 Tuner construction and testing	Dec-05 Intermediate repor	
32	3.1.5 Design cavity B		
33	3.1.6 Construction cavity B		Jun-06: cavity B ready
34	3.1.7 Power coupler design & engineering		
35	3.1.9 RF coupler construction		
36	3.1.8 RF source order & preparation		
37	3.1.10 Modulator preparation for 700 MHz test stand		
38	**3.2 SPOKE CAVITIES**		
39	3.2.1 Test stand preparation at FZJ		
40	3.2.2 Evaluation of 760 MHz resonator in vertical cry	Mar-05 Intermediate repor	
41	3.2.3 Evaluation of 352 MHz 2-gap res. in vertical cr	Oct-05 Intermediate report	
42	3.2.4 Design of coupler prototype		
43	3.2.5 Test of coupler prototype		

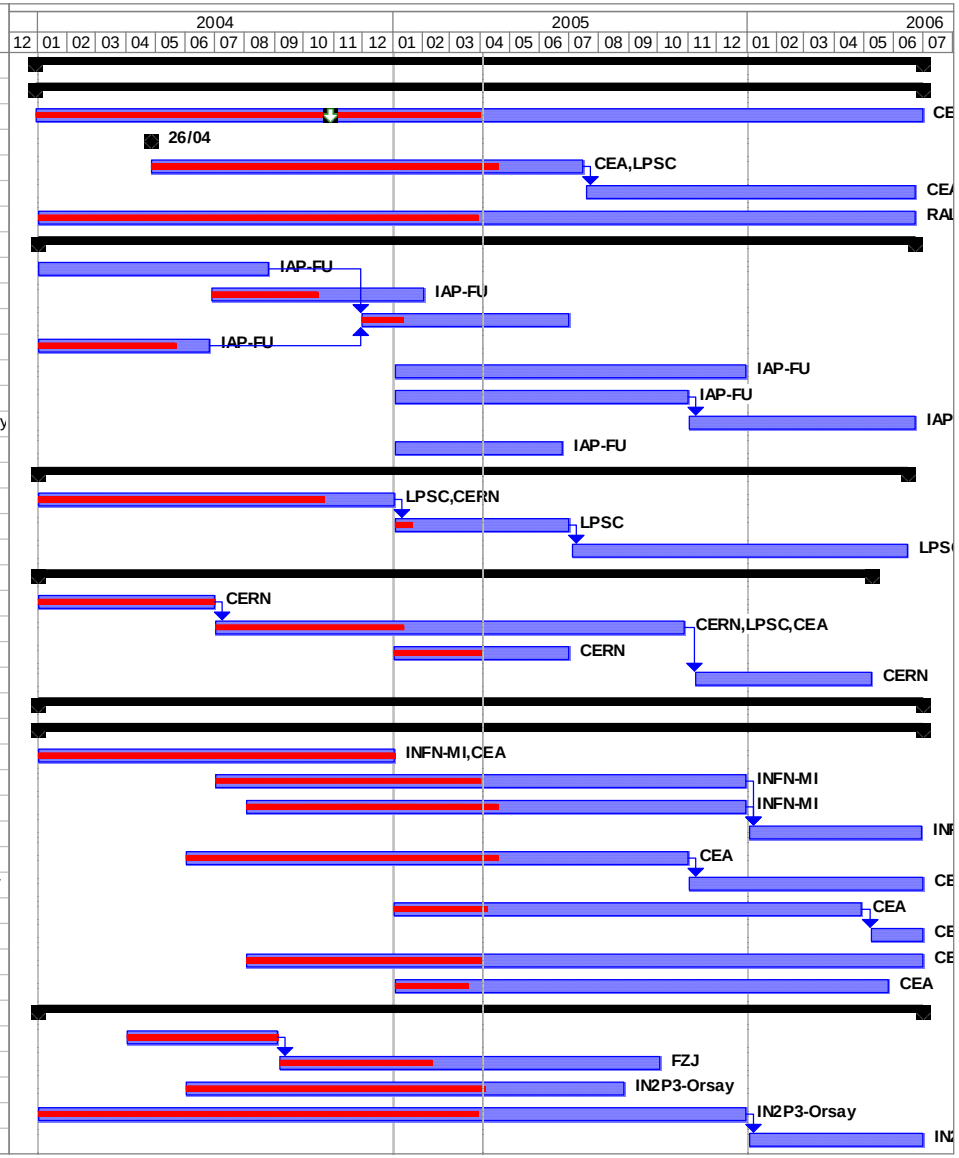
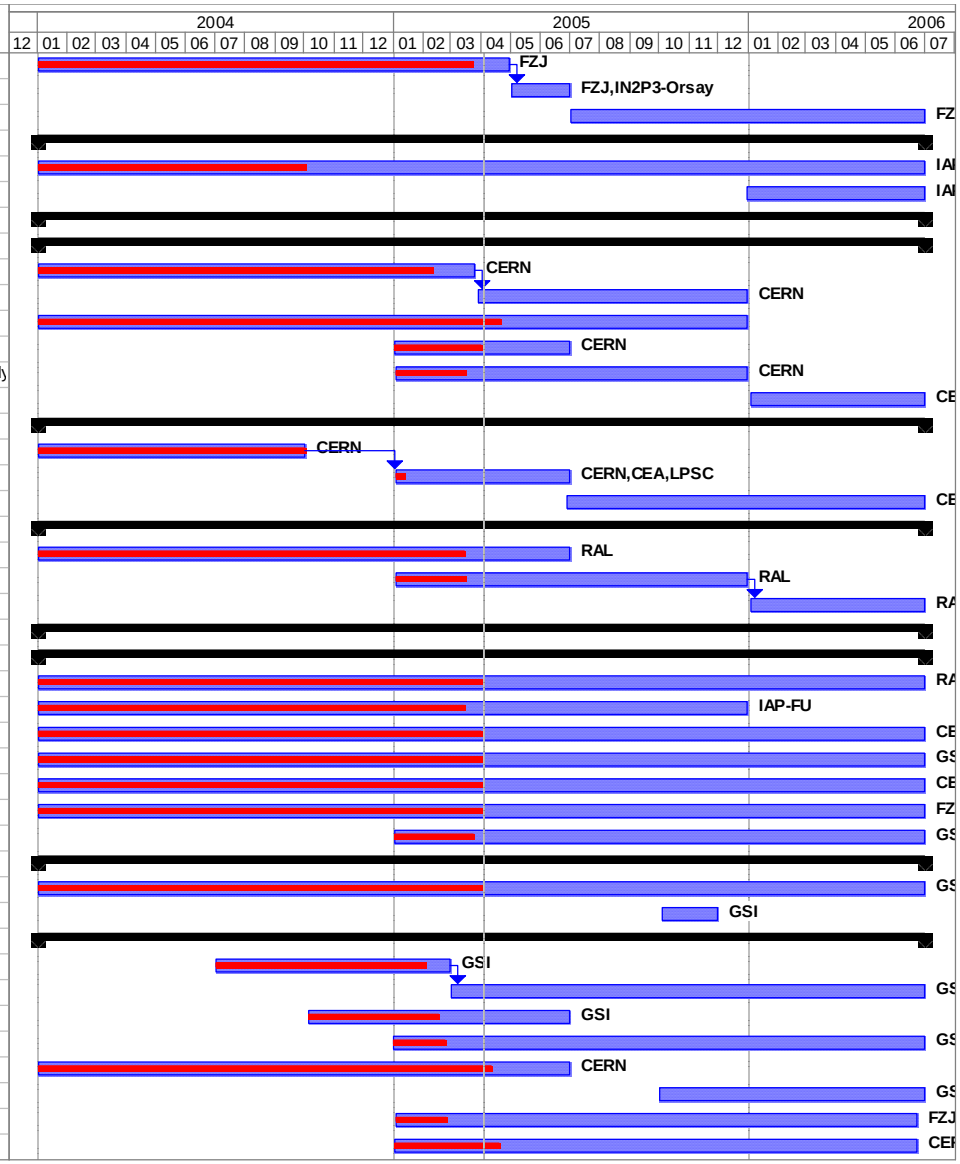
ID	Task Name	Milestones	Deliverables
44	3.2.6 RF design of 352 MHz multi-gap resonator	May-05 Design report	
45	3.2.7 Engineering of resonator, coupler and tuner		
46	3.2.8 Final design of 352 MHz multi-gap prototype		
47	**3.3 CH RESONATOR**		
48	3.3.1 Design of tuning system	Jun-05 Intermediate repor	
49	3.3.2 Construction of CH tuning system		
50	**WP4: CHOPPING**		
51	**4.1 CHOPPER STRUCTURE A**		
52	4.1.1 Pre-prototype construction	Jun-05 Design report	
53	4.1.2 Pre-Prototype testing	Mar-05 Intermediate repor	
54	4.1.3 Driver construction, testing		
55	4.1.4 Full scale prototype design		
56	4.1.5 Full scale prototype construction		Aug-06: Prototype ready
57	4.1.6 Pre-prototype testing w/o beam		
58	**4.2 CHOPPER LINE**		
59	4.2.1 Dump design		
60	4.2.2 Dump construction	Jun-05 Intermediate repor	
61	4.2.3 Beam line assembling		
62	**4.3 CHOPPER STRUCTURE B**		
63	4.3.1 Pre-prototype design and test	Jun-05 Intermediate repor	
64	4.3.2 Prototype design	Jun-06 Design report	
65	4.3.3 Prototype construction		
66	**WP5: BEAM DYNAMICS**		
67	**5.1 Code development**		
68	5.1.1 3D space charge routines dev., testing		
69	5.1.2 LORASR development	Dec-05 Intermediate repor	
70	5.1.3 Neutralization and ECR source modelization st		
71	5.1.4 Improvement, modelling high current		
72	5.1.5 Code preparation for 3 MeV test stand	Jun-06 Intermediate repor	
73	5.1.6 Codes preparation for SC linacs		
74	5.1.7 Code comparison and benchmarking		
75	**5.2 Experiment at UNILAC**		
76	5.2.1 Preparation, simulations		
77	5.2.2 First experiment campaign		
78	**5.3 Diagnostics and collimation**		
79	5.3.1 Profile measurement prototype design, constru	Mar-05 Prototype ready	
80	5.3.2 Profile measurement testing		
81	5.3.3 Non-interceptive bunch measurement design		
82	5.3.4 Non-interceptive bunch measurement const. an	Jun-05 Components ready	
83	5.3.5 Halo meas. device design, construction	Jun-05 Prototype ready	Jun-05 Final report
84	5.3.6 On-line transmission control		
85	5.3.7 Beam profile monitor design		
86	5.3.8 Collimators study