Design Considerations for a Bunch Length Monitor for the Fermilab Linac

Elliott McCrory
July 24, 1990

A precise measurement of the length, or phase spread, $\Delta\varphi$, of a linac bunch is needed for the commissioning of the new 805 MHz/400 MeV linac under construction at Fermilab. A design outline of a Bunch Length Monitor (BLM) is presented here. This paper is written after returning from Los Alomos and discussions there with Olin van Dyck and his visitors from the Soviet Union, Alexander V. Feschenko and Leo V. Kravchuk from the Institute for Nuclear Research in Moscow. Feschenko has successfully built BLM for the 100 MeV linac at INR.

Introduction

There are several ways to measure the phase spread of a linac particle beam bunch. A fast gap, to detect the beam-induced rf fields inside the beam pipe has been built at FNAL, both by me (with Jim Griffin—50Ω stripline) and by the Tevatron instrumenters (Webber, McConnell, *et al.*—resistive wall monitor). Fast gaps are typically limited to a bandwidth of about 2 GHz for a beam with $\beta<1$ [we have $0.46<\beta<0.72$ (tank 5 out 400 MeV)] because the electromagnetic fields of a particle precedes the arrival of that particle for velocities less than the speed of light.

A second way, also used at FNAL, is to detect the amplitude of the beam signal at two different frequencies. A single number, proportional to the longitudinal extent of the beam, $\sigma(\varphi)$, is obtained in real time.

The third way is with some sort of dedicated bunch length device, which is what I discuss here. The inherent advantages of this sort of device are (1) the amount of information which can be obtained and (2) its bandwidth.

Early BLMs

Richard Witkover at Brookhaven National Laboratory invented the idea for a BLM as his thesis project [Nucl Inst Meth 137 (1976), *pp* 203-211]. Apparently, this device was never refined enough to incorporate it into a working accelerator.

Witkover's device works by applying a time-varying high voltage to a wire which intercepts the beam. The voltage on the wire has the same frequency as the beam bunching, but the phase is variable. A uniform magnetic field downstream of the wire causes the secondary electrons, liberated from the wire by the beam, to be bent out of the primary beam path. A slit in front of an electron detector at the far end of the magnetic field selects electrons of a particular energy, and thus a particular phase of the primary beam.

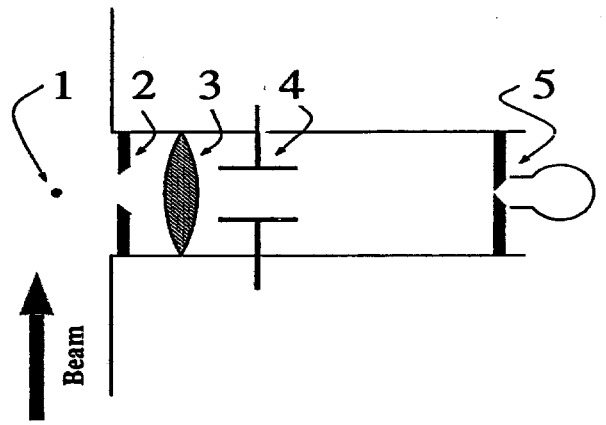

Figure 1, Schematic of a Bunch Length Monitor.

Around 1980, Feschenko was given (took?) the task to measure the bunch length of the INR beam. He tried the Witkover device and could not make it work. He tried other similar designs which also did not work. He then had the idea to change from a longitudinal time dependence on the secondary electron beam to a transverse dependence. He has been able to get this device to work at 10 MeV on the INR linac and obtain a resolution of about 1 degree at 198 MHz [1986 Linac Conference Proceedings, *pp* 323-327.].

I propose to build a device similar to Feschenko's successful BLM.

A Working BLM

Feschenko's BLM works as follows (see Figure 1). The primary ion beam passes through the target wire, 1, and quickly produces lots of secondary electrons. The wire is at a modest negative potential, 3 to 10 KV, so the electron are accelerated radially away from the wire. The electrons reach essentially full momentum very close to the wire, so the bending of the electric field lines close to the irregularly-shaped walls is not important. In Feschenko's

device, the electrons then pass through a slit, 2, and are focused by an electrostatic einsel lens, 3. The voltage on the lens is set by generating thermionic-emission electron from the wire (electrically heating it) and focusing these (dc) electron off-line. The electrons pass through a deflecting plate, 4, which oscillates at the frequency of the beam, at a selectable phase angle. (Feschenko was forced to use the third harmonic of the beam frequency, 594 MHz, because of beam-induced multi-pactoring at 198 MHz.)

Electrons excited from the wire at a particular beam phase will then pass into a detector (a faraday cup or a photo-multiplier) at the far end of the monitor, 5. Electrons of slightly different, or any other, phase will not enter the detector. Thus, this device can be adjusted to measure the intensity of the secondary electron beam with respect to the beam phase. Since the instantaneous intensity of the secondary electrons is directly proportional to the instantaneous intensity of the primary beam, the longitudinal profile of the primary beam can be measured. Feschenko has achieved a resolution of about 0.8° for his 198 MHz beam

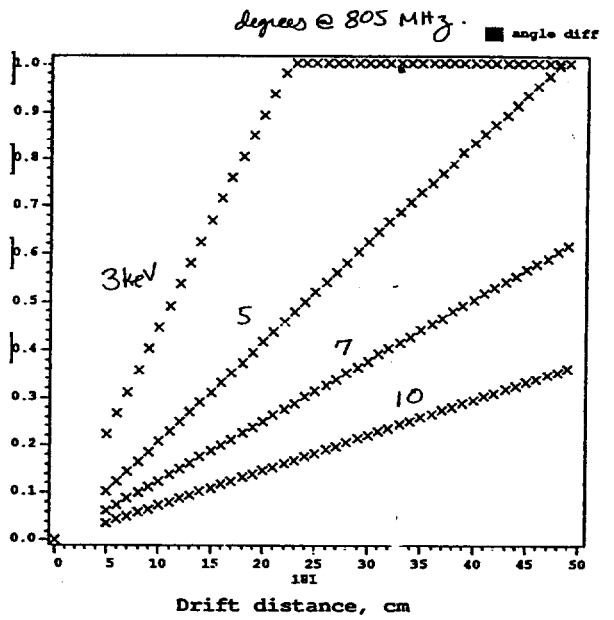

Figure 2, Resolution effects of thermal electron velocities.

An 805 MHz BLM?

I want to build a BLM with the highest possible resolution. We expect to have beam bunched in 805 MHz buckets to about 15°. To obtain ten readings, a reasonably accurate representation of the shape of the beam, we would need a resolution of 1.5°. (This represents a "bandwidth" of about 200 GHz.) What limits the resolution of this sort of BLM?

Very simply, the resolution is likely to be most severely limited by smearing the time-uniformity of the secondary electron beam. This happens either by having secondary electrons of different velocities, or by having secondary electron travel paths of different lengths, or both. The limits of resolution can be organized into three categories: (1) Real limits set by physics; (2) geometry/assembly precision and (3) optical design of the electron beam. The items in (1) are fixed and unchangeable; the items in (2) *should* not be a problem; the items in (3) are where you have some control and can improve the design.

Discussion of Resolution Limits

1. Real limits set by physics
   - a. Energy spread of the secondary electrons
   - b. Time delay/spread of the s.e.
   - c. angle spread of the s.e.

1.a. Witkover was able to measure the energy spread of the secondary electrons. The peak of the distribution is at about 3 eV, but it extends out to several tens of eV. This effect is diminished by increasing the final velocity (kinetic energy) of the electron beam. Feschenko used 5 KV; I suggest we try for 10 KV. For example, at 5 keV, a 3 eV energy difference between two secondary electrons creates a phase difference of 0.2° (805 MHz) at 10 cm. At 10 keV, this phase difference becomes 0.06°, see Figure 2.

1.b. Atomic physicists would say that secondary electrons are liberated from an atom within 10^{-14} sec from the passage of the primary beam. The best experiment to date (this fact comes from a personal conversation with Feschenko; I need to check the reference) measures the time spread for a tungsten wire as *less than* 6×10^{-12} sec (including the time necessary for electrons to percolate to the surface). This would be 0.43° at 201 MHz, but to 1.74° at 805 MHz. If this time is accurate, this effect will (hopefully) dominate the resolution of the device. On the other hand, if the actual number is smaller, then we might be able to measure it with better precision!

1.c. Having secondary electrons come off at different angles seem to reduce the effect of the energy spread of the secondary electrons. For s.e.'s of initial velocity v_{actual} and angle φ:

$$v_{measured} = v_{actual}\cos(\varphi) + \textit{High Voltage on wire}$$

But note that this is a tiny effect since the electrons are accelerated radially away from the wire: electron from the back of the wire will not be seen.

2. Geometric/assembly precision
   - a. alignment of wire, lens, and electron detector
   - b. dimensions of wire and final slit

2.a.b. Feschenko's experience is that no extraordinary measures need to be implemented here; just exercise reasonable and normal care when building and aligning the device. An educated guess on this effect, based on the misalignment of the wire with the silt of 1°, is equivalent to about 0.3° of phase resolution at 805 MHz.

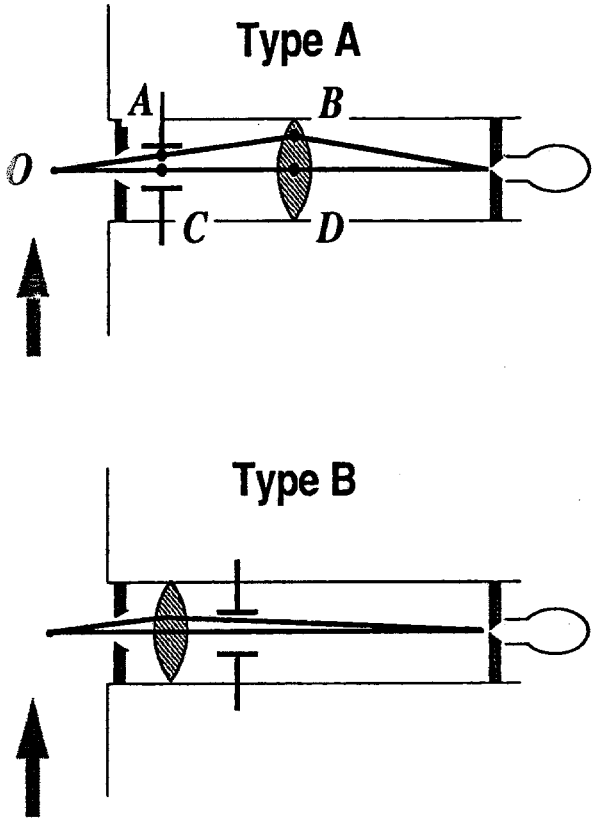

Figure 3, Path length differences in BLM.

3. Optics of the secondary electron beam
   a. einsel lens optics
      (1) Path length differences
      (2) Lens dimensions: aberrations
      (3) Magnification of the image of the wire on the final slit
   b. deflector plates
      (1) Strength of the deflection
      (2) Fringe fields
      (3) Maximum deflection of the beam within the deflector

3.a.1. It is worth pointing out that the time-of-flight-differences of the electron beam are only pertinent from the wire to the deflector. Once the electron pass by the deflector, the time at which they arrive at the detector is irrelevant since the detector is not time sensitive. So, referring to the Figure 3, note that drift time along OAB is longer than that of OCD by:

$$(1/\beta c)\, d\, (1/\cos(\theta) - 1)$$

where $\theta = \angle AOC$ and d=OC. This effect is minimized by decreasing d and/or θ. In other words, put the deflecting plates as close to the wire as possible, reduce the aperture of the lens and/or move the lens back. Also note that, if the lens is upstream of the deflector, path length and velocity differences are more important since the electrons slow down within an einsel lens. Numbers are presented below.

3.a.2. Lens aberrations are expected from an einsel lens. The best way to reduce this effect is to increase the aperture of the lens so that the beam only passes through the good-field region.

3.a.3. The magnification factor of a microscope is:

$$M = s_1/s_2$$

where s_1 is the (virtual) object-to-lens distance and s_2 is the lens-to-(virtual-)image distance. A smaller magnification leads to a smaller image and a higher resolution. See below for numbers.

3.b.1. The stronger the deflection, the faster the image moves across the slit and the higher the resolution. See below for numbers.

3.b.2. The stronger the field in the plates, the greater the non-linearities in the fringe fields. This effect has not been addressed yet.

3.b.3. The transit time of the electrons through the deflecting plates is, potentially, quite large. As the field increases in the deflector (or the KE of the electron beam is reduced), non-deflected electrons go farther off axis. This limits the deflecting field, contrary to 3.b.1. The maximum deflection is:

$$d = (e/m)\,(E/\omega)\,\sin \omega t\ \{(-\sin \omega t)/\omega + t \cos \omega t\}$$

where t is the time it takes for an electron to get half-way through the deflector, E is the amplitude of the electric field. One would reasonably expect to use half the aperture of the deflector before encountering problems. The graph in Figure 4 shows the maximum excursion for a 10 keV electron beam. For an aperture of 3 cm in the deflector, we can probably use gradients up to at least 10 KV/cm without this effect destroying the resolution.

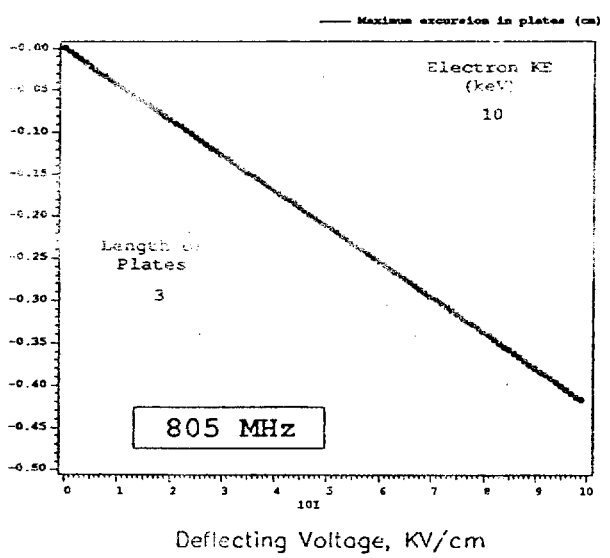

Figure 4, Maximum deflection of electron beam within the deflector.

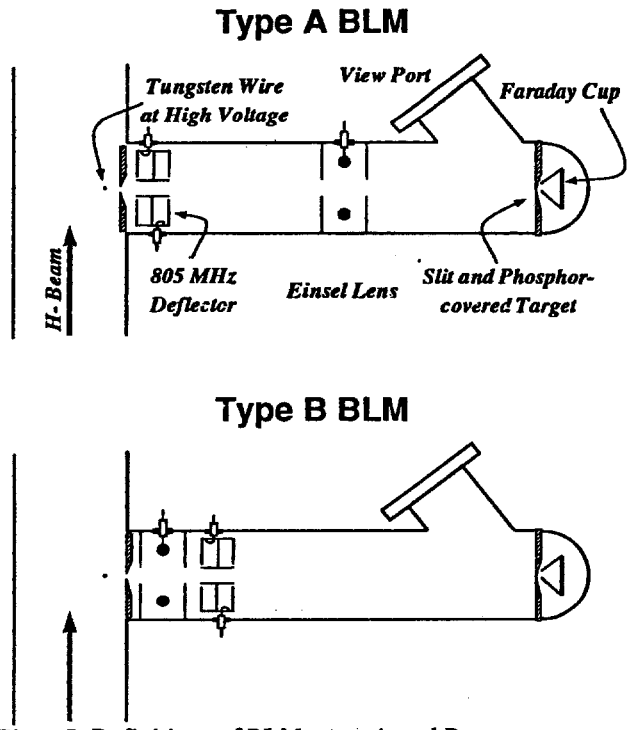

Figue 5, Definitions of BLM types A and B.

Summary of Resolution Questions; Design Issues

Obviously, there are lots of variable parameters. Most fundamentally, should the deflector go before the lens or after the lens? Maybe more than one lens is better? For now, I will consider a single lens. A double lens system will reduce the magnification (*good*), but increase the aberrations (*bad*).

I will refer to a "type A" BLM as one with the deflector in front of the lens; "type B" is a BLM with the lens between the wire and the deflector. These two types

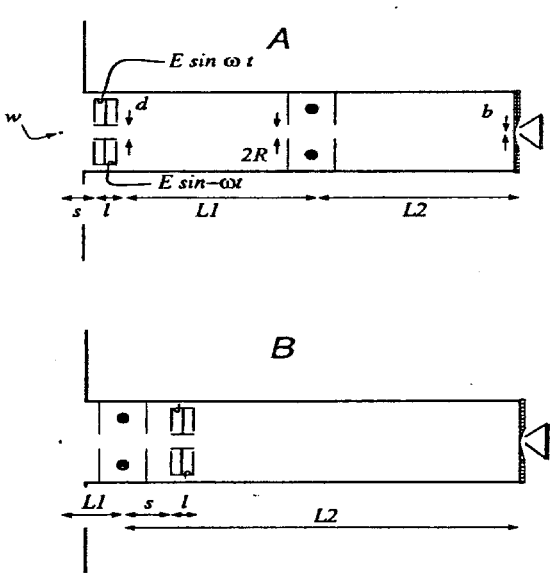

Figure 6, Definition of dimensions for BLM's.

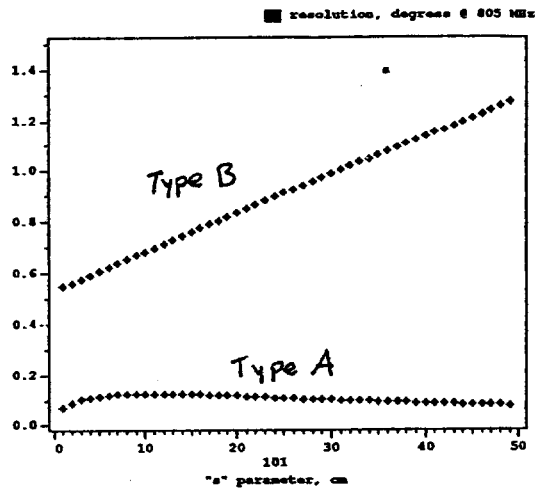

Figure 7, Resoultion due to path length differences

are shown in Figure 5; Figure 6 defines the dimensions. Type A has the advantage of getting the deflector as close to the wire as possible, thus diminishing the effect of drift-time differences to the deflector, **3.a.1.** Also, since the beam velocity changes in a complicated way within an einsel lens, this effect can be ignored for a Type A BLM. Type B has the advantage of not having the deflection of the beam reduced by the focusing action of the lens, **3.b.1.** I will now write down the resolution equations for both types of detectors.

The differences in path length are depicted in the Figure 3 and lead to the following time dispersion:

Type A

$$T = (d/(\beta c))\,(\sqrt{(R^2 + (L_1+l+s)^2)}/(L_1+l+s) - 1)$$

Type B

$$T = (1/\beta c)\ \{\sqrt{(R^2+L_1^2)} + \sqrt{(R^2+L_2^2)} - (L_2-s-l/2)\cos(\mathrm{atan}(L_2/R))\}$$

Using reasonable values for the rest of the parameters, the graphs of the Figure 7 are obtained. An effect on the order of 0.1° is easily obtainable in a Type A BLM, but 3/4° is about the best for a Type B. This calculation does *not* account for the effect of velocity differences in the electron beam (effect **1.a**, above).

The next effect to calculate is the time it takes for the image of the wire to pass across the slit. For both types:

$$T = (b + Mw)/y'$$

where y' is the speed of the wire image at the focus plane; M is the magnification. Other important parameters, as shown in Figure 6, are: E, the electric field on the deflecting plates; E′, the time derivative of that field; v, the velocity of the secondary electron beam. (It is difficult to compare the two types of BLM's directly. In Figure 6, the s-parameter is varied for both. Note that L_1 does not change, so the distance from the wire to the lens changes for type A, but not for type B.)

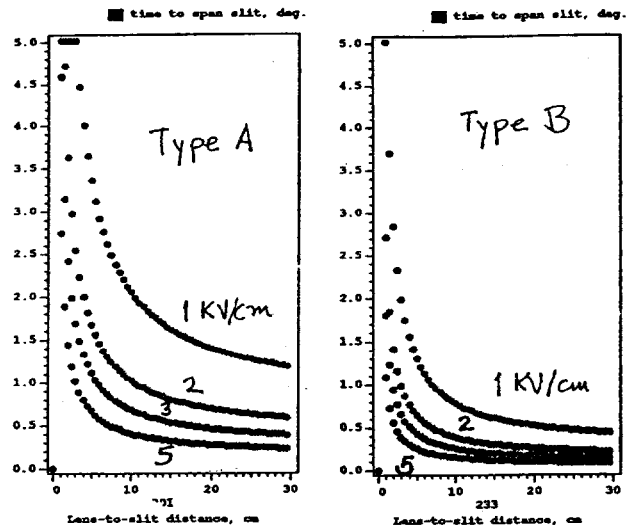

Figure 8, Resoultion due to image at slit.

Type A

$$y' = E'\,(e/m)\,(l/v^2)\,L_2\{1 - (L_1 + l/2)/(s + l + L_1)\}$$

Note that y' is reduced by the focusing action of the lens. Substituting and cancelling:

$$T = (b/y') + w\,/\,\{\,E'\,(e/m)\,(l/v^2)\,(s + l/2)\,\}$$

The magnification factor cancels several terms from y'; the second term does not (surprisingly!) depend on either L_1 or L_2. A hand-waving argument would point out that the benefit of moving the slit away from the deflector and increasing the lever arm of the deflection is exactly canceled by the increase in the magnification of the image.

Type B

$$y' = E'\,(e/m)\,l/v^2\,(L_2 + l/2)$$

Simple substitution produces the time resolution.

The graphs in Figure 8 show these resolution effect. For a Type A, you need at least 2 KV/cm gradient on the plates, at KE=10 keV, to get comfortably under 1 degree resolution. Half that, 1 KV/cm, is sufficient for a Type B BLM. It is still to be determined if the deflector can achieve these gradients.

Summary of Resolution

An overview of the realistic resolution factors for both types of BLM's is presented in the Table on the following page. Also listed are the results Feschenko has obtained for his BLM at the INR. His works at 198 MHz; so the resolutions I need are a factor of four higher for 805 MHz degrees. The predicted resolution for the two types of BLM are similar. (The resolution in parenthesis includes the rejection time of the secondary electrons from the wire.) I hope to improve on Feschenko's design in the following ways: Use 10 keV electrons rather than 4 (to reduce the effect of 1.a), better alignment (the effects in 2), shorter electron path lengths (3.a.1) and higher deflecting fields (3.b.1).

Kinematic Effects at the Wire

A further class of effects not yet mentioned is the contamination of the secondary electron beam by primary electron and/or other junk from the beam. Every effort will be made to restrict unwanted junk from the monitor. But high-energy electrons from the beam, scattered off the wire, would pass through the deflector and the einsel lens with very little pertubation. These particles would profoundly affect the efficiency of the monitor.

There are (at least) three sources of primary electrons present.

$$(1)\quad p + e_{in\ wire} \rightarrow p + e_{free}$$

This produces an electron only forward in the lab frame.

Summary of Resolution Factors for Proposed Bunch Length Monitors

Resolution Effect / BLM Type	1.a KE differences	1.b s.e. emission time	2 alignment	3.a.1 Path Length differences	Speed of image across slit	Total resolution, degrees 805 MHz
Type A	0.04	<1.74	0.3	0.1	0.7 (3KV/cm, 15 cm)	0.77 (1.90)
Type B	0.2	<1.74	0.3	0.7	0.3 (3KV/cm, 20 cm)	0.84 (1.94)
Feschenko	0.29	<0.43	0.2	0.21	0.4?	0.57 (0.72) (200 MHz)

These spurious electrons can be eliminated by tilting the monitor slightly upstream. Unfortunately, with an H-minus beam, there are collisions which send spurious electrons everywhere in the lab, for example

$$(2)\quad p + e_{H\ ion} + e_{in\ wire} \rightarrow p_{spectator} + e_{free} + e_{free}$$

$$(3)\quad p + e_{H\ ion} + W \rightarrow p_{spectator+}\ e_{free} + W^*$$

where, of course, W is a (heavy) tungsten atom. Given the kinematic boost in the lab frame, these (presumably) isotropic scattering channels will produce the smallest cross-section at right angles to the beam. Thus, I propose that the monitor be essentially orthogonal to the beam direction.

Results

I have tested the optics of a type A BLM in the lab. Right now, my high-voltage power supplies are current limited at 0.5 milliamperes; I have ordered new ones. I can capture 0.6 μA of electrons in a faraday cup behind a 0.05 cm slit consistent with a simple geometric calculation. The lens aperture is 0.5 cm. The apparent size of the image is 0.025 cm; the wire is 4-mil (0.01 cm) tungsten. I can still detect a bit of aberrations from the lens; reducing the aperture to 0.4 cm would probably just about eliminate it.

I am having a beam prototype built for installation into the 200 MeV line just downstream (straight-ahead) of the spectrometer. I will measure the primary and secondary electron flux.

Other Considerations

To insure a sub-one-degree resolution, the readback on the phase of the deflector must be very accurate. With mechanical phase shifters driven by stepping motors, achieving 0.04° accuracy at 805 MHz is reasonable (5000 motor steps for 180°). Note that only relative phase is important.

The power needed to drive the deflector at 2 KV/cm may be rather high. For a 2 cm aperture (4000 V), 100 Ω impedance, and a Q of 2000, we would need about 20 watts of power to drive a deflector. Acheiving this high Q for a stable frequency may be tricky.

A quick & dirty cost estimate reveals that one of these BLM's would cost around $11,000. The majority of the costs are from: $2000 for RF power amp, $4000 for good linestrechers and motors, and $3500 for the high-voltage power supplies for the wire and for the lens.