FERMILAB-LU-184

Status
of the
Beam Diagnostics
and the
Computer Controls
for the
400 MeV/805 MHz Fermilab Linac

Elliott McCrory

Thursday December 12, 1991

I. Diagnostics

A. List of Devices; Status

B. Arrangement/Layout

II. Controls

Layout/overview; Hardware; Network; Software

Beam Position Monitors

One BPM in all but 2 quads; readout electronics for one plane of each BPM, but cabling for all.

Fabrication Complete

hardware, electronics, readout

Calibration Results, R=(1.890 ± .005) dB/mm

Centering Algorithm

Steering Algorithm

Resistive Wall-current Monitors

Delta-t phase pickup, rudimentary bunch-length detector and beam toroid.

Fabrication complete on 7 of 8

Linac Beam Steering

Existing software utilizes 2 wire scanners and 4 dipole trim magnets (2 horizontal & 2 vertical) to center the beam as it exits the linac. In the Linac upgrade, we are concerned with actively steering the beam along the entire length of the linac.

One of the more commonly used steering algorithms involves using N Beam Position Monitors and M dipole correcting magnets with N > M.

The initial distorted orbit is described by an N-vector X_O, the displacement at each beam detector. An array of dimension M, θ consists of the angular kicks given by the dipole magnets, so the final particle position is given by:

$$X_f = X_O + T\,\theta$$

We then proceed with a least squares minimization of :

$$S = (X_o + T\theta) \bullet (X_o + T\theta)$$

i.e. $$\frac{\partial S}{\partial \theta_k} = 0 \Rightarrow \theta = -(\tilde{T}T)^{-1}\,\tilde{T}X_o$$

where $$T_{ij} = \sqrt{\beta_i \beta_j}\,\sin\Delta\Phi, \qquad \Delta\Phi = \int_i^j \frac{ds}{\beta(s)}$$

so given $\beta(s)$ for the lattice, the elements T_{ij} can be calculated. Then from a measured displacement X_O, θ can be calculated and the proper current supplied to each of the dipole magnets.

Wire Scanners

Fabrication complete, but waiting on finalization of design to include *stopping foils* on some

Bunch Length Detectors

From A. V. Feschenko, with mods. Still in prototype stage. Have verified that it will work for H-minus beam; S/N≈6. Prototype deflecting cavity ready; 200 MeV prot by 3-92. Long-lead items ordered for 6 more

Diagnostics Summary

All diagnostics, except BLD, are essentially done. The mechanical design of the BLD has been trickier than we originally though, but the basic design remains unchanged.

Mechanical Schematic For 805MHz Bunch Length Detector

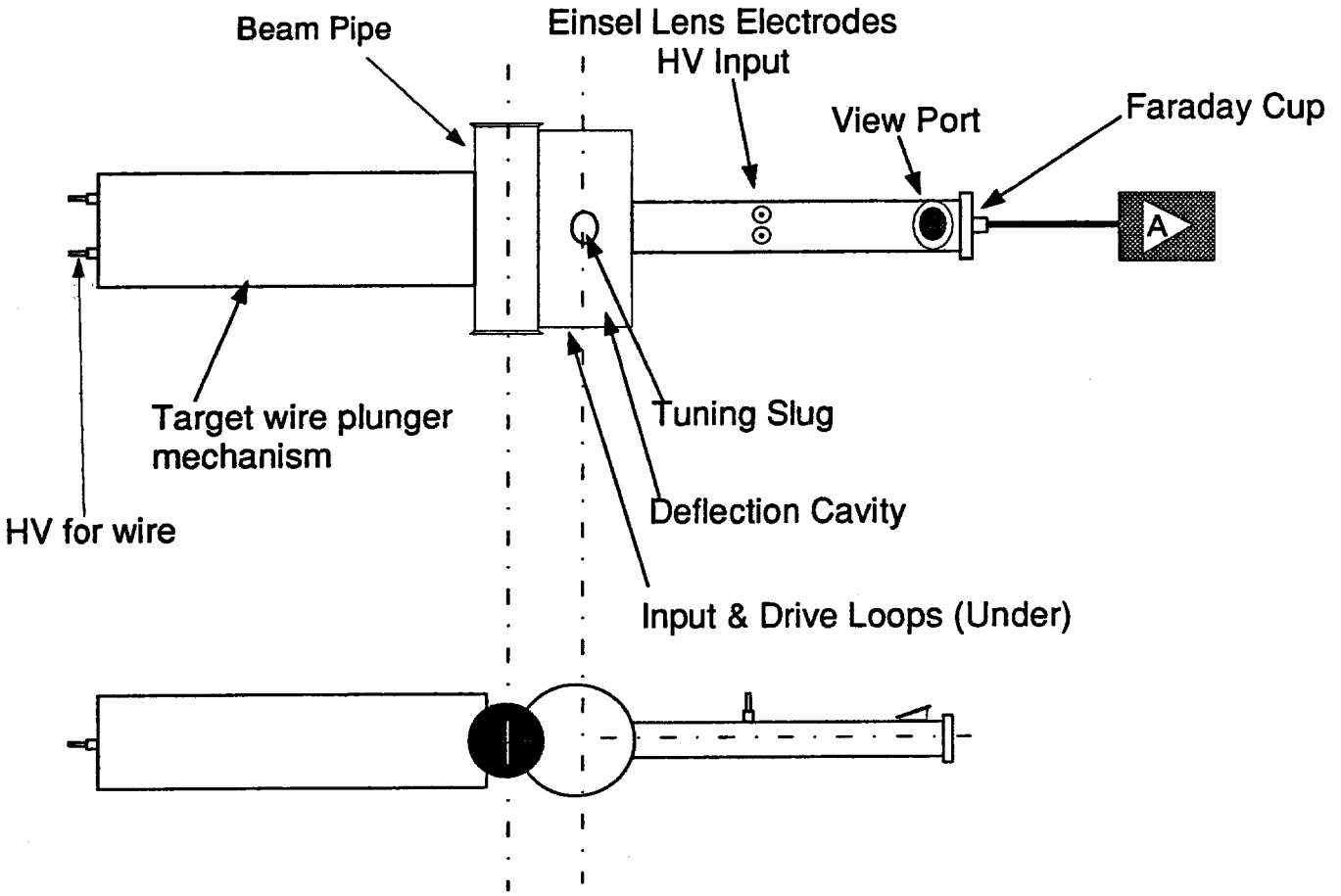

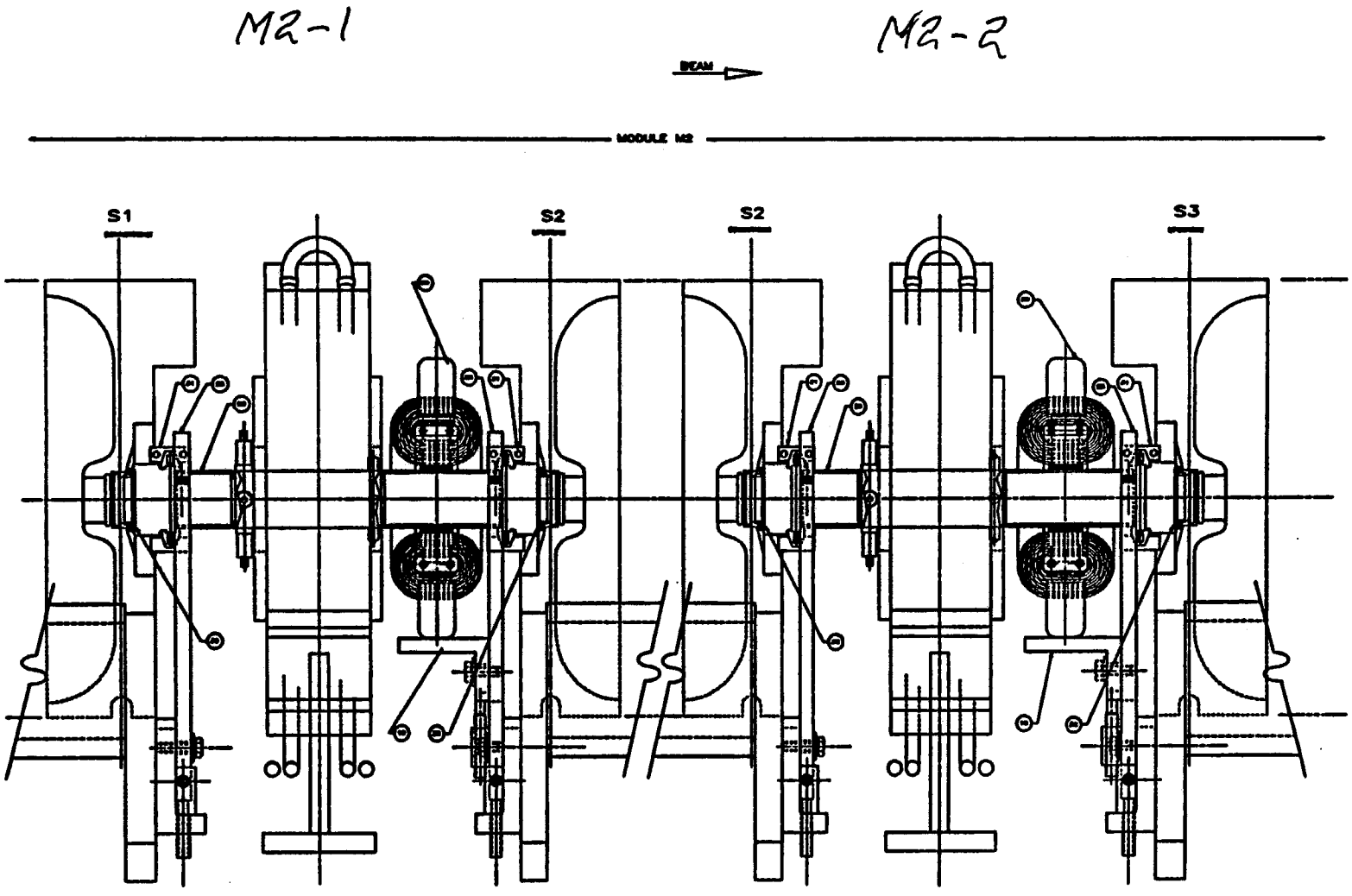

SHEET NO.5 OF 16

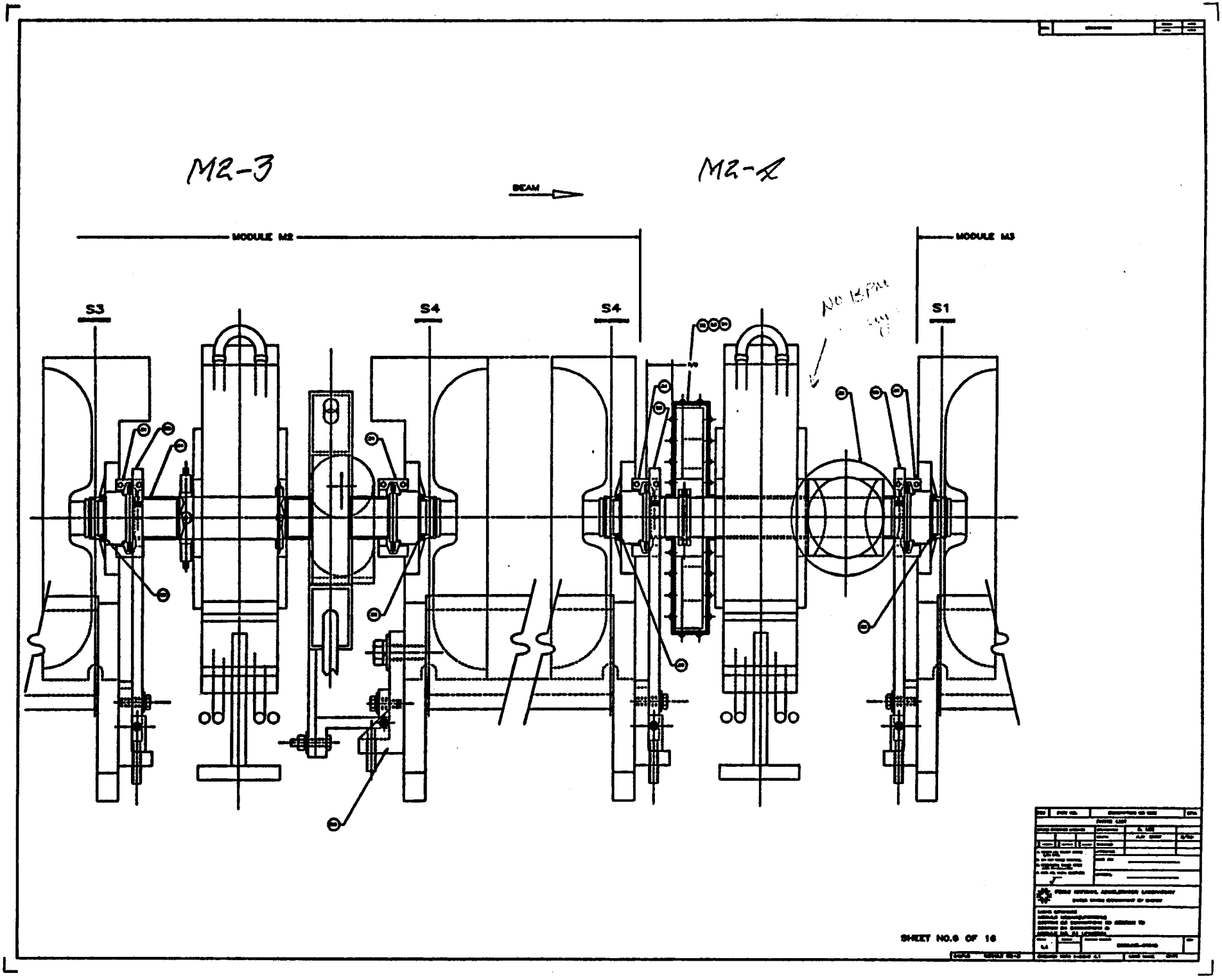
M2-3
M2-2
BEAM
MODULE M2
MODULE M3
S3
S4
S4
S1
SHEET NO.6 OF 16

List of Diagnostic Devices in 805 MHz Linac

Position	Device List
T0	BPM(1), trim(1), WS, BLD
T1	BPM, WS, trim(3), BLD
T2	BPM, WS, trim(3), BLD, trim(3), BPM, RWM
M1-1	BPM, trim(2)
M1-2	BPM, WS
M1-3	BPM, WS
M1-4	RWM
M2-1	BPM, trim(3)
M2-2	BPM, trim(3)
M2-3	BPM, WS
M2-4	RWM
M3-1	BPM, trim(3)
M3-2	BPM, trim(3)
M3-3	BPM, WS
M3-4	RWM, BPM
M4-1	BPM, trim(3)
M4-2	BPM, trim(3)
M4-3	BPM, WS
M4-4	RWM, BPM
M5-1	BPM, trim(4)
M5-2	BPM, trim(4)
M5-3	BPM, WS
M5-4	RWM, BPM
M6-1	BPM, trim(4)
M6-2	BPM, trim(4)
M6-3	BPM, WS
M6-4	RWM, BPM
M7-1	BPM, trim(4)
M7-2	BPM, trim(4)
M7-3	BPM, WS
M7-4*	RWM, BPM

KEY:

BPM(1) is an existing Linac BPM

trim(1) has an overall length of 3.8 cm, approx field=2600 G-cm

trim(2) has an overall length of 5.1 cm, approx field=3300 G-cm

trim(3) has an overall length of 6.4 cm, field=3990 G-cm

trim(4) has an overall length of 8.9 cm, field=5560 G-cm

* Formerly part of the 400 MeV transfer line

Computer Control System

All hardware ready
Upgrade of old control system begins 1-23-92.

Layout

Hardware

VME, VI, SRM, Quick Digitizer

Networks

ACNET, Token Ring, ARCNET, Data Server

Application Programs

Local Applications (LA), MCR, Unix, Macintosh

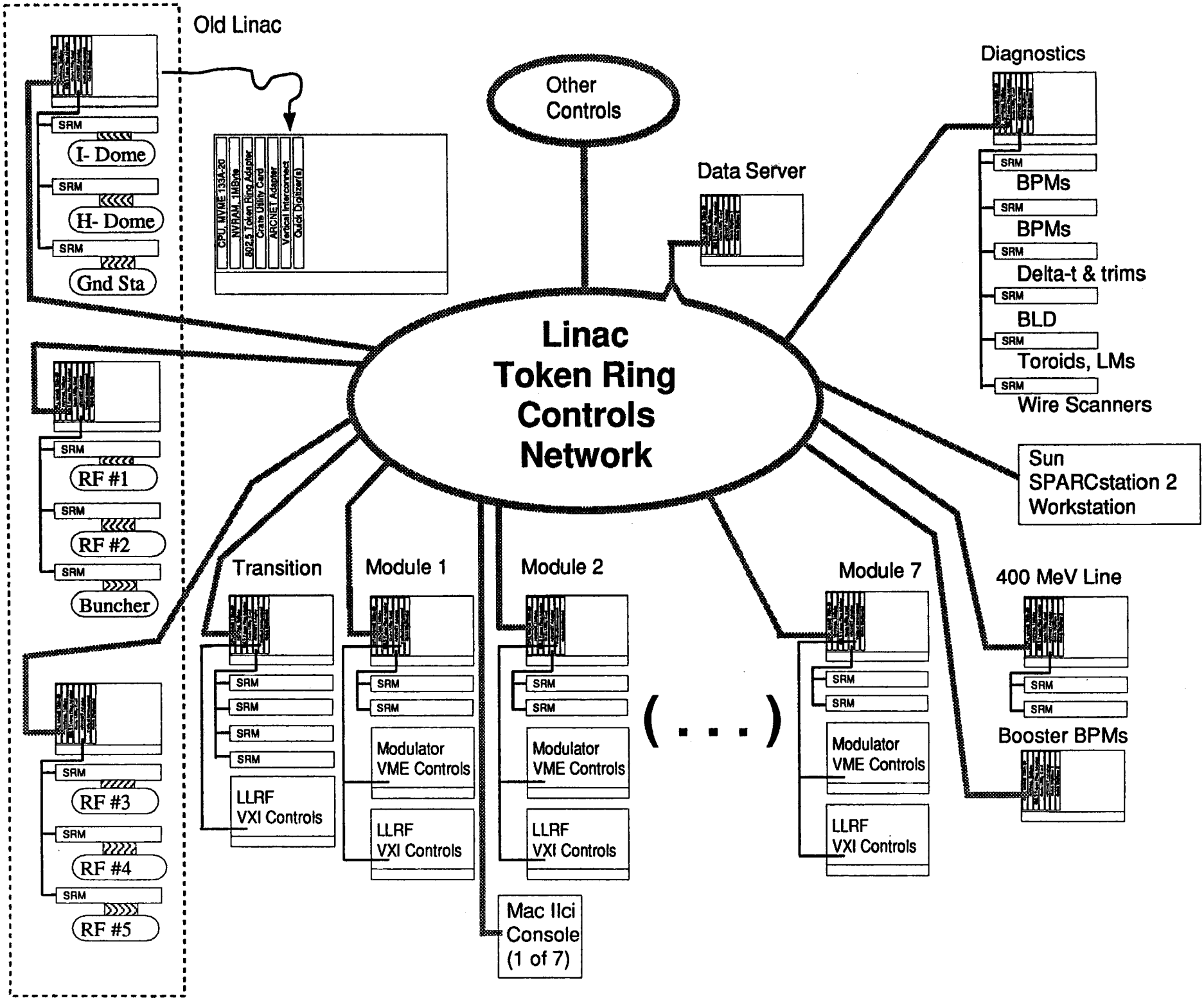
Old Linac
SRM
I- Dome
SRM
H- Dome
SRM
Gnd Sta
CPU, MVME 133A-20
NVRAM, 1MBytes
802.5 Token Ring Adapter
Crate Utility Card
ARCNET Adapter
Vertical Interconnect
Quick Digitizer(s)
Other Controls
Data Server
Diagnostics
SRM
BPMs
SRM
BPMs
SRM
Delta-t & trims
SRM
BLD
SRM
Toroids, LMs
SRM
Wire Scanners
Linac Token Ring Controls Network
SRM
RF #1
SRM
RF #2
SRM
Buncher
SRM
RF #3
SRM
RF #4
SRM
RF #5
Sun SPARCstation 2 Workstation
Transition
SRM
SRM
SRM
SRM
LLRF VXI Controls
Module 1
SRM
SRM
Modulator VME Controls
LLRF VXI Controls
Module 2
SRM
SRM
Modulator VME Controls
LLRF VXI Controls
(. . .)
Module 7
SRM
SRM
Modulator VME Controls
LLRF VXI Controls
400 MeV Line
SRM
SRM
Booster BPMs
Mac IIci Console (1 of 7)

Quick Digitizer Diagram

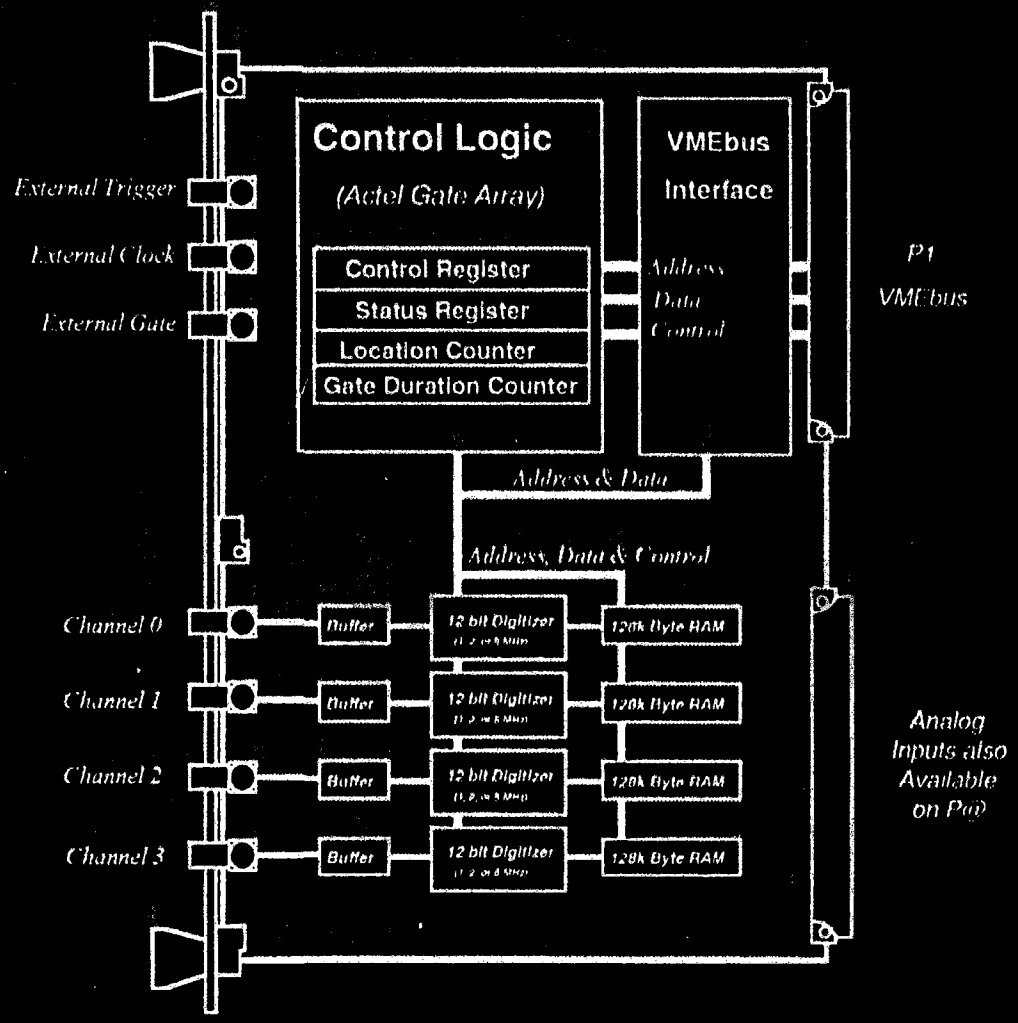

Application Programs

Local Applications

There have been 15 LAs written. They duplicate the closed-loop and recovery functions in the old control system, and they implement various klystron closed-loops and some of the acnet support. In addition, we have 8 page applications and 7 other new major modules in the VME control system.

Main Control Room

We have been able to make the improvements in the control system with only small changes in the MCR application programs.

Unix Applications

An ''index page'' model has been adopted and an ''application program librarian'' has been implemented on the Linac group's SPARCstation 2 workstation. Many simple, yet powerful programs have been written to diagnose the control system. These programs are used regularly.

MacIntosh Applications

The parameter page and related programs on the Mac have been well-received and are being used extensively at AZero. With Mac-X, the Unix applications can run there, too.

General Index Page

diagnosing_controls | bpm_calibration | parameter_pages

sys_status–change | Restart | Quit

diagnosing_controls selected

Sub–page 'diagnosing_controls'

ac–who | memory_dump | Alt_launch_pg_G

Get_TR_Errors | Get_Aborts | page_G_launch

Edit_RDATA_Table | List_VME_devices | nodes_not_there

List_Group_Adrs | Restart | Quit

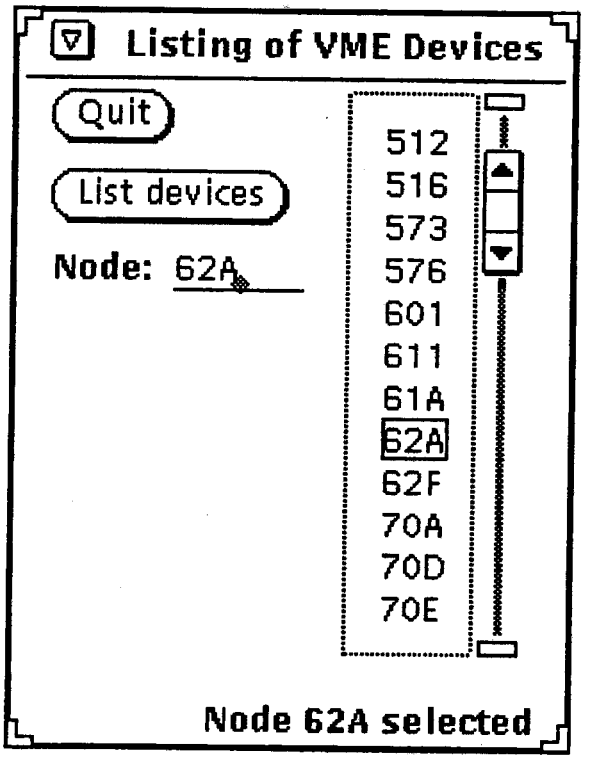

get-data-base

Quit | Again | Rerun, output to printer | Print selected text

062A:0039	KAFILI	A0 FILAMENT CURR	(3.318 A)	91-06-11
062A:003A	KAFILP	A0 FILAMENT POWER	(0.363 KW)	91-04-30
062A:0080	KATTOP	TNKTEMP TOP	(98.776 F)	91-06-24
062A:0081	KATBOT	TNKTEMP BOTTOM	(95.218 F)	91-06-24
062A:0082	KATC3	THERMOCOUPLE#3	(33.852 DEGC)	91-10-21
062A:0083	KATC4	THERMOCOUPLE#4	(0.006 C)	91-06-07
062A:0084	KATC5	THERMOCOUPLE#5	(0.008 C)	91-06-07
062A:0085	KAWGPS	WG PRESSURE	(14.639 PSIA)	91-11-19
062A:0086	KADRV	APRIL RF CH1	(-0.022 V)	91-06-25
062A:0087	KAWG1F	APRIL RF CH2	(0.145 VPK)	91-07-30
062A:0088	VAMAN	MANIFOLD	(-0.027 V)	91-08-15
062A:0089	KAFCI5	KLY FOCUS #5	(-1.428 V)	91-10-17
062A:008A	BADCH		(-2.209 V)	91-10-10
062A:008B	VASEC4	SECTION 4	(-0.255 V)	91-08-15
062A:008C	VAWG	WAVEGUIDE	(-0.099 V)	91-10-10
062A:008D	VASEC2	SECTION 2	(-0.020 V)	91-10-10
062A:008E	KAV1	A0 VACUUM #1	(-1.348 V)	91-06-20
062A:008F	KAV2	A0 VACUUM #2	(-1.338 V)	91-06-20
062A:00A0	KARFLK	RF LEAK DET	(-0.024 V)	91-06-12
062A:00A1	KAPHS	2A CAV-WG PHASE	(0.005 DEG)	91-11-19
062A:00A2	BCHAN1	BAD CHANNEL	(0.000)	91-10-21
062A:00A3	BCHAN2	BAD CHANNEL	(1.459 VPK)	91-10-21
062A:00A4	KACAVV	2A CAV SUM VOLT	(-0.003 VPK)	91-11-19
062A:00A4	KACAVV	2A CAV SUM VOLT	(-0.003 VPK)	91-11-19

Networks

ACNET

Full ACNET support has been added to the Linac VME control stations. This includes specifically: RETDAT, SETDAT, ACNET-AUX and FTPMAN. In addition, data server support has been added for Linac-type SSDN's.

Token Ring & ARCNET

All communications amoung systems is on the Token Ring network. Communication between a VME control station and an SRM is on ARCNET.

Data Server

Because the MCR Vaxen and PDP11's cannot handle 15 Hz data from more than one or two Linac nodes, we have implemented a *data server* for these machines. The ACNET database entries refer to all Linac devices through this data server. We have verified that this machine can handle the potential load, with ease.