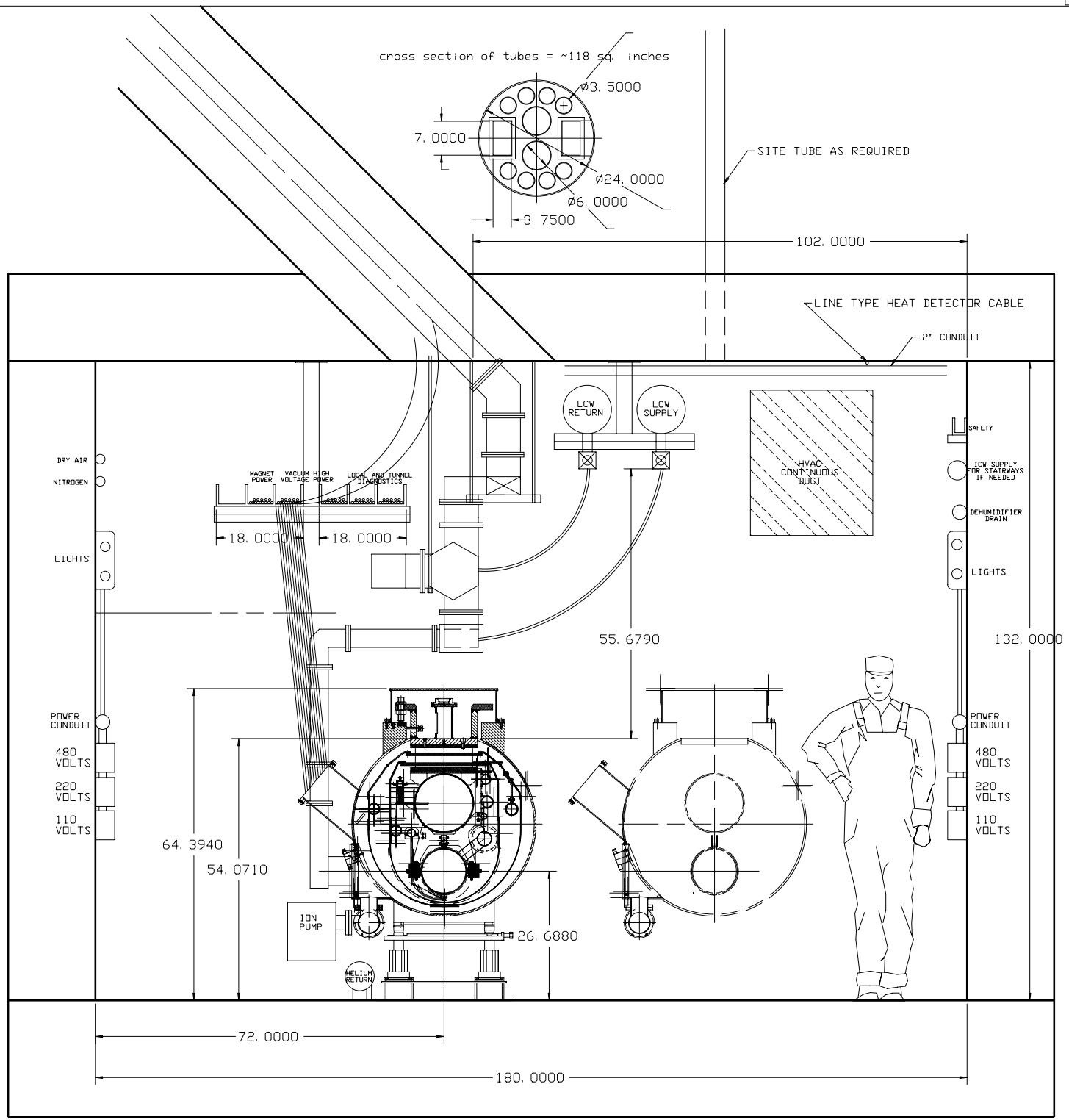

UNLESS OTHERWISE SPECIFIED			ORIGINATOR	N. MAY	02-MAR-2005
			DRAWN	D. SCHMITT	02-MAR-2005
±	±	±	CHECKED		
1. BREAK ALL SHARP EDGES MAX.			APPROVED		
2. DO NOT SCALE DRAWING.			USED ON		
3. DIMENSIONS BASED UPON					
4. MAX. ALL MACH. SURFACES			MATERIAL		
5. DRAWING UNITS:					

FERMI NATIONAL ACCELERATOR LABORATORY
UNITED STATES DEPARTMENT OF ENERGY

PROTON DRIVER
TUNNEL CROSS SECTION
BETA 1

SCALE	DRAWING NUMBER	SHEET	REV
	, — —	1 OF 1	

CREATED WITH : Idecs11MXseries GROUP: ACCELERATOR MECH. SUPPT.