Observation, Control and Modal Analysis of Coupled-Bunch Longitudinal Instabilities

R. Claus, J. Fox, H. Hindi, I. Linscott, S. Prabhakar, W. Ross, D. Teytelman, SLAC*
A. Drago, M. Serio, INFN FRASCATI; G. Stover, LBL

Abstract

The operation of a longitudinal multi-bunch damping system using digital signal processing techniques is shown via measurements from the LBL Advanced Light Source. The feedback system (developed for use by PEP-II, ALS and DAΦNE) uses a parallel array of signal processors to implement a bunch by bunch feedback system for sampling rates up to 500 MHz. The programmable DSP system allows feedback control as well as accelerator diagnostics. A diagnostic technique is illustrated which uses the DSP system to excite and then damp the beam. The resulting 12 ms time domain transient is Fourier analyzed to provide the simultaneous measurement of growth rates and damping rates of all unstable coupled-bunch beam modes.

1 SYSTEM DESCRIPTION

Figure 1 presents a block diagram of the processing system developed for use at the SLAC PEP-II accelerator.[1]

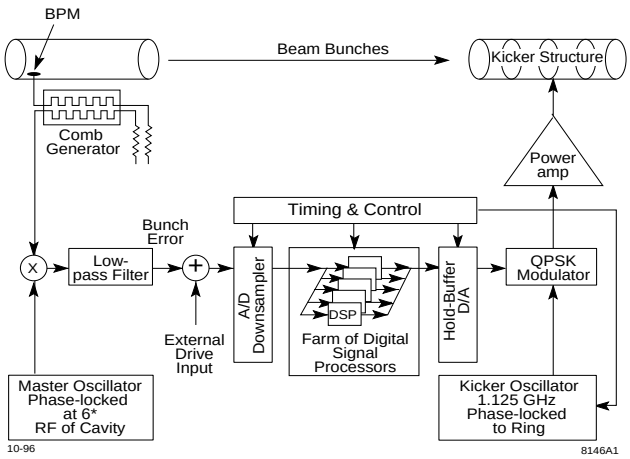

Figure 1: Block diagram of the longitudinal feedback system. The array of digital signal processors operate in parallel to compute correction signals on a bunch by bunch basis.

The PEP-II prototype longitudinal feedback system was installed at the LBL Advanced Light Source and commissioned for routine operation in September 1995. The ALS implementation requires a 500 MHz bunch crossing and error correction rate to control the fully populated 328 bucket ring. The ALS machine has displayed evidence of strong longitudinal instabilities since commissioning in April 1993[2]. Operated in conjuction with an all-mode transverse feedback system[3] the feedback systems have demonstrated increased intensity and reduced linewidths of the emitted higher order undulator radiation. The feedback systems suppress coupled-bunch instabilities up to the full (400 mA) operating current of the storage ring.

* Work supported by Department of Energy contract DE-AC03-76SF00515

2 EXPERIMENTAL RESULTS

One interesting feature of the programmable system is the capability to record the bunch motion as the feedback system operates[4]. Observing the motion as the feedback system is turned off displays the growth of unstable bunches, while recording the motion when the feedback signals are turned back on reveals the net damping in the system. Frequency domain information can be computed from these time-domain data sets via use of Fourier transform techniques.

An example measurement using this grow-damp technique is illustrated in Figure 2. In this experiment the beam is initially stable under the action of the feedback system. Under software control the feedback gain is set to zero, and after a holdoff interval the DSP processors start recording the bunch motion. For $t_{holdoff} < t < t_{on}$ the growing bunch oscillations are recorded, and at t_{on} the feedback gain is restored to the operating value. The motion (now a damping transient) continues to be recorded until t_{max}, at which time the DSP's stop recording but continue computing the feedback signal (controlling the beam). The data records are stored in a dual-port memory which is accessible to an external processor (the total record length is 1008 samples of each of 324 bunches). After the data array is read, the DSP processors can be triggered again to record another transient.

Figure 2a shows the envelopes of the synchrotron oscillations of each of 328 bunches for such a transient. We see a complicated growth of motion up to 6 ms, followed by damping of the motion. In this representation the phase relationship of the individual bunch oscillations is not obvious. If the data is arranged in a 2 dimensional array of bunch # vs. sample number, each row (containing the oscillation coordinate of each of 328 bunches sampled on a single turn) [1] can by Fourier transformed to reveal modes of oscillation of the bunches. This Fourier transform is computed for each sampling time (turn number) in the array. The resulting data

[1] Due to the action of the downsampled processing, the data for the various bunches are actually sampled on different turns corresponding to the sampling pattern and downsampling factor. In the post-processing an interpolating filter is used on each bunch's column in the raw data array to compute the oscillation co-ordinates over the non-sampled turns, effectively time-aligning all the bunch co-ordinate data before the Fourier transforms are taken.

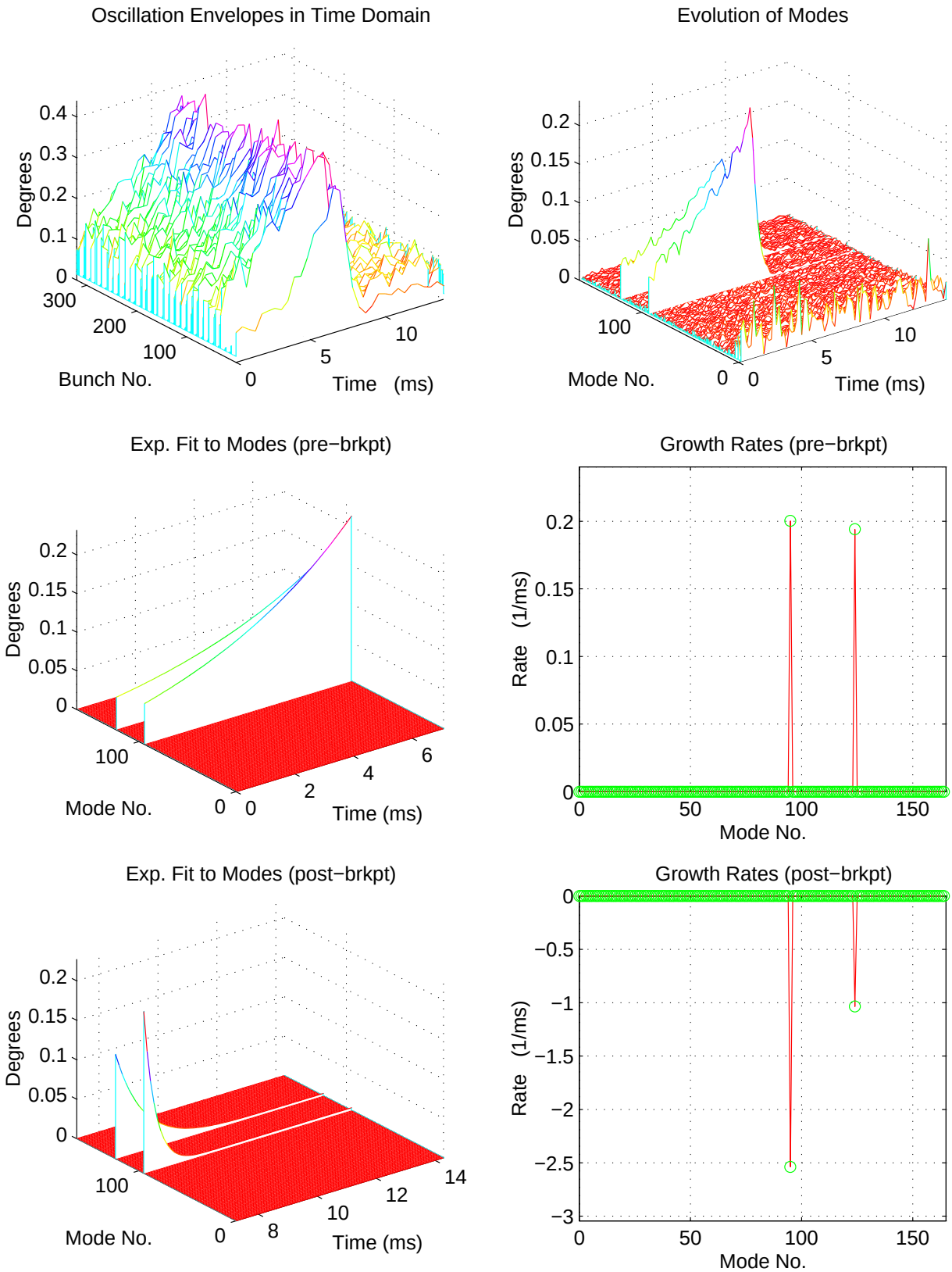

feb0696/2105: Io= 118.4mA, Dsamp= 22, Shift Gain= 4, Nbun= 320, Gain1= 0, Gain2= 1, Phase1= 30, Phase2= −140, Brkpt= 496, Calib= 24 cnts/mA−deg.

Figure 2: Grow-Damp Transient and Fourier Transform showing two beam modes

(figure 2b) shows the presence of two modes of oscillation (modes -95 and -124) in the transient.[2] The growth rates and damping rates for each mode can be found via the numeric fitting of exponential curves to the data (figure 2c,e). Figure 2d,f present the effective growth rate and damping rate vs. mode number - showing the action of the feedback system in turning the net growth rate from positive to negative.

The instability growth rate per mode is due to a net effective impedance (from a summation over revolution harmonics)[5]

$$1/\tau_l = \frac{I_0 f_{rf}\alpha}{2(E/e)Q_s} Real(Z_l^{eff}) \quad (1)$$

$$Z_l^{eff} = \sum_{p=-\infty}^{p=+\infty} \frac{\omega_p}{\omega_{rf}} exp(-\omega_p^2\sigma_\tau^2) Z(\omega_p) \quad (2)$$

$$\omega_p = (pN + l + Q_s)\omega_{rev}, \quad (3)$$

where τ_l is the growth time of mode l, I_0 the beam current, $Z(\omega)$ the total ring impedance, e the charge of an electron, Q_s the synchrotron tune (f_s/f_{rev}), σ_τ the rms time-of-arrival variation of particles within a bunch, and N the number of bunches.

The system provides a damping rate which is proportional to the feedback gain; the net response of the system is determined by the difference between the two (natural growth and feedback damping) rates

$$1/\tau^{fb} = \frac{f_{rf}\alpha}{2(E/e)Q_s} G_{fb} \quad (4)$$

$$1/\tau_l^{net} = 1/\tau_l - 1/\tau^{fb} \quad (5)$$

which is plotted per excited mode in figure 2f.

This approach directly measures the unstable modes of the ring - with a variant of this technique it is possible to measure damping/growth rates for naturally stable modes. For this measurement a narrowband excitation at the desired mode frequency is injected into the feedback system at the error summing node (see figure 1). The grow-damp (or damp-damp) transient can be recorded and processed just as for the self-excited case. If this measurement is repeated for several modes (or an excitation is applied which excites several modes) the effective gain of the feedback system vs. mode can be determined.

3 SUMMARY

The time domain transient techniques illustrated require only a few ms of beam motion and are essentially invisible to users of the storage ring. The information obtained from the analysis of the time domain data reveals growth rates and damping rates of beam modes and is useful in checking or adjusting the feedback system. The time domain techniques, in conjunction with off-line FFT analysis, are complementary to narrowband detection in the frequency domain, in that they allow the quantification of many unstable modes in a single non-destructive transient, and do not require repetitive narrowband steady state swept frequency domain measurements of each potentially unstable mode. The essential advantage of the time domain technique is speed - successive narrowband sweeps of each possibly unstable mode can reveal the same information. However, for an accelerator with potentially hundreds of unstable modes and constantly drifting parameters the speed advantage makes the time-domain techniques very useful as accelerator diagnostics.

[2] The Fourier transform of a spatial record of length N is decomposed into N/2 spatial frequencies - in this representation the 328 modes of the bunch system are folded into the 164 modes of the turn Fourier transform. Each computed "mode" actually contains two true beam modes corresponding to the upper and lower synchrotron sidebands around a particular revolution harmonic[6].

4 ACKNOWLEDGMENTS

The authors thank J. Hoeflich, J. Olsen, G. Oxoby of SLAC and J. Byrd, J. Corlett, G. Lambertson of LBL for numerous thoughtful discussions and direct contributions of technical expertise. We also thank Boni Cordova-Gramaldi of SLAC for her patient fabrication of electronic components.

5 REFERENCES

[1] M. Serio "Multi-Bunch Instabilities and Cures," Proc. European Particle Accelerator Conference, 1996.

[2] A. Jackson, et al. "Commissioning and Performance of the Advanced Light Source," Proc. Particle Accelerator Conference, Washington,D.C. 1993

[3] W. Barry, et al,"Commissioning and Operation of the ALS Transverse Coupled-Bunch Feedback System", Proc. Particle Accelerator Conference, Dallas, 1995

[4] D. Teytelman, et al, "Feedback Control and Beam Diagnostic Algorithms for a Multi-processor DSP System," Proc. Beam Instrumentation Workshop, 1996

[5] M. Zisman et al, Lawrence Berkeley Lab. Report No. LBL-21270.

[6] F. Sacherer, "A Longitudinal Stability Criterion for Bunched Beams," IEEE Trans. Nucl. Sci., NS-20-3, p. 825 (1973)