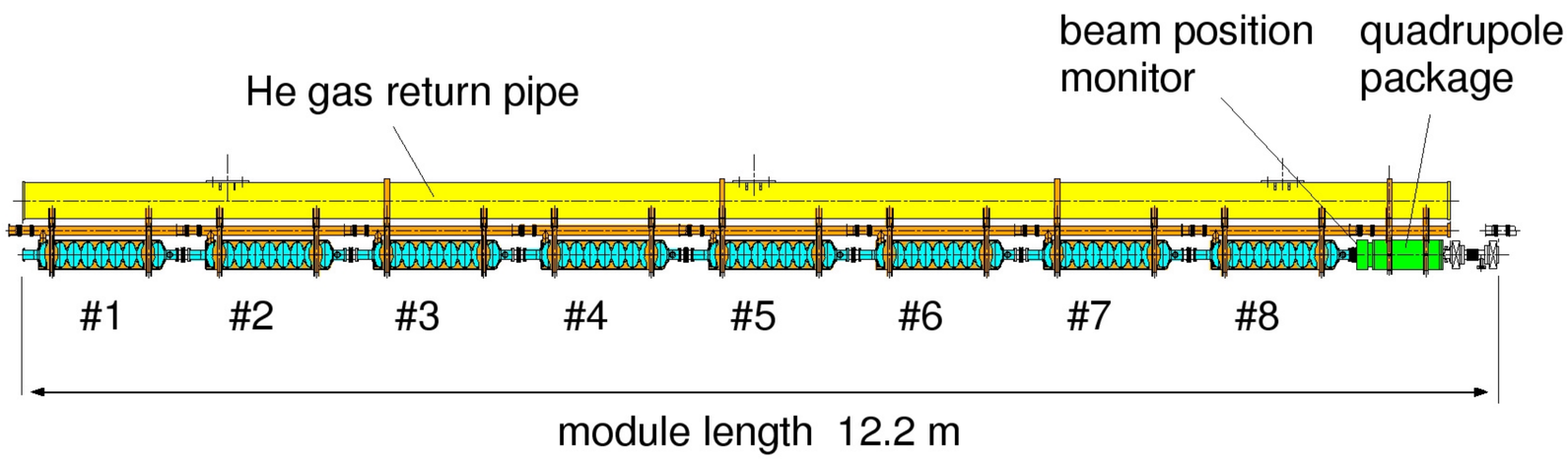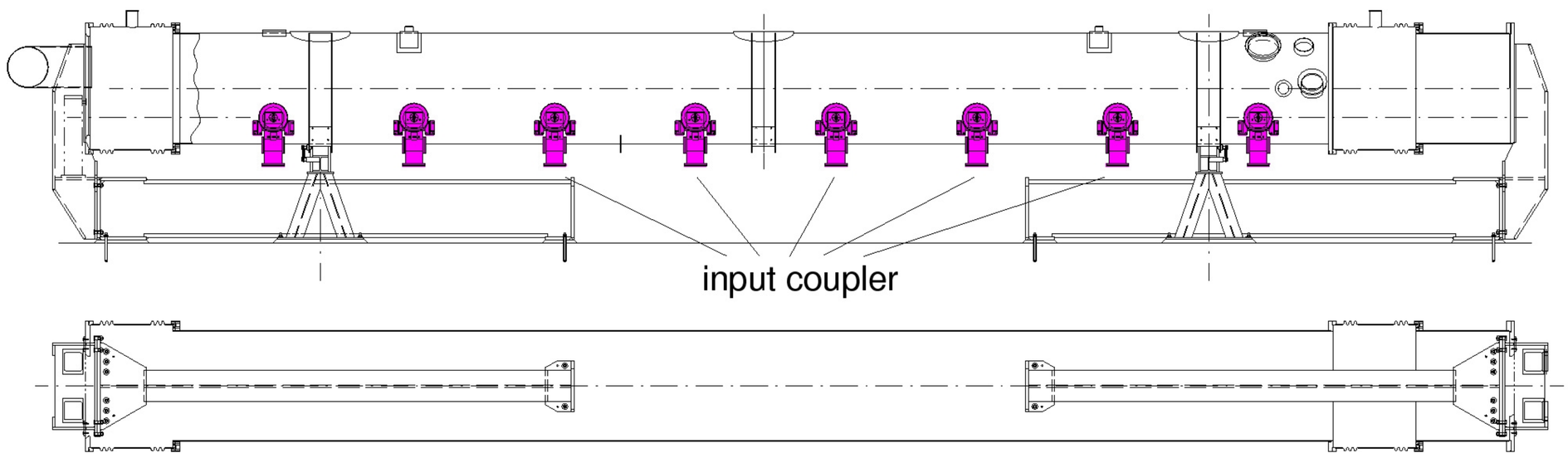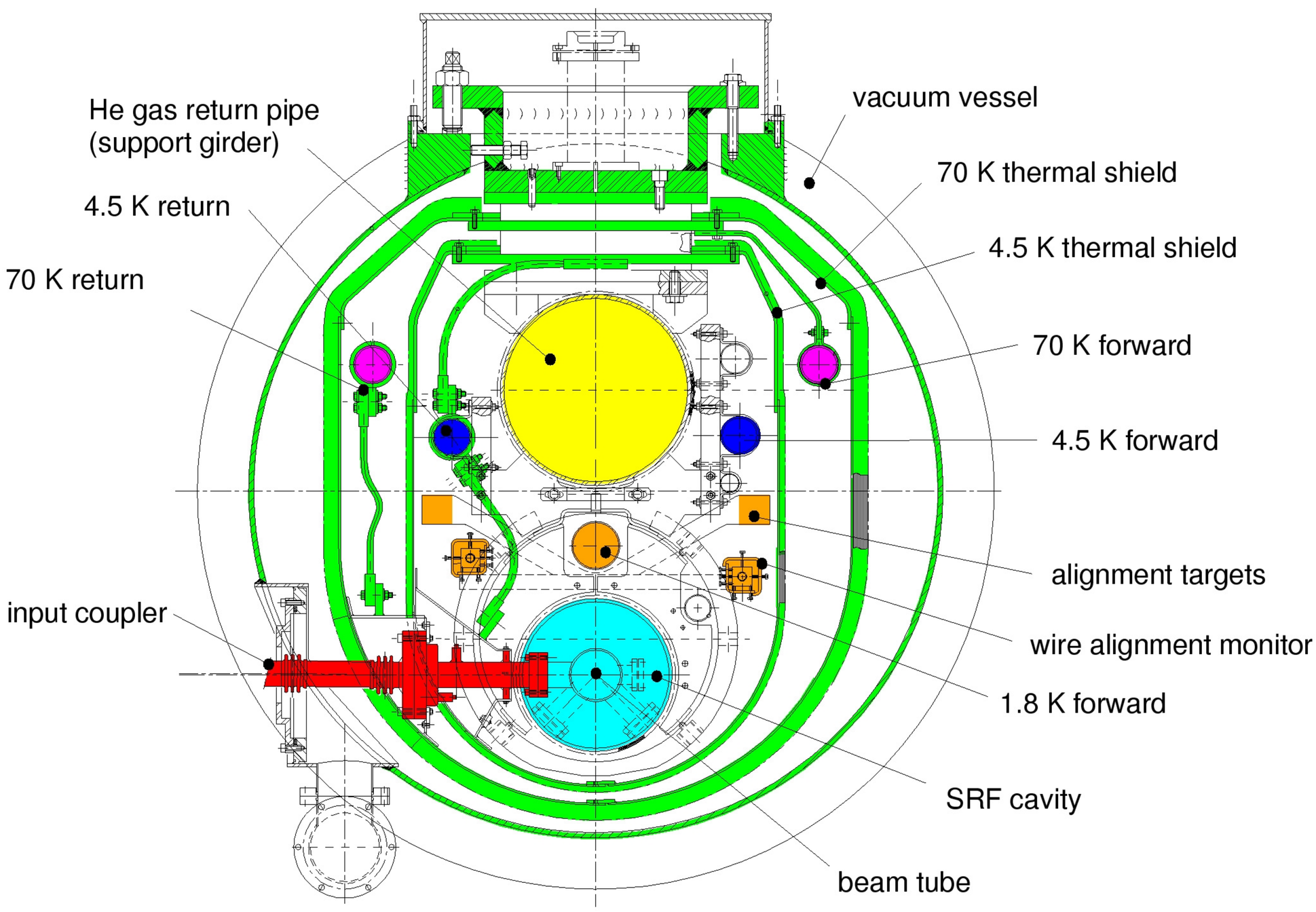Accelerator Modules