TTF2 Linac-Cryogenics

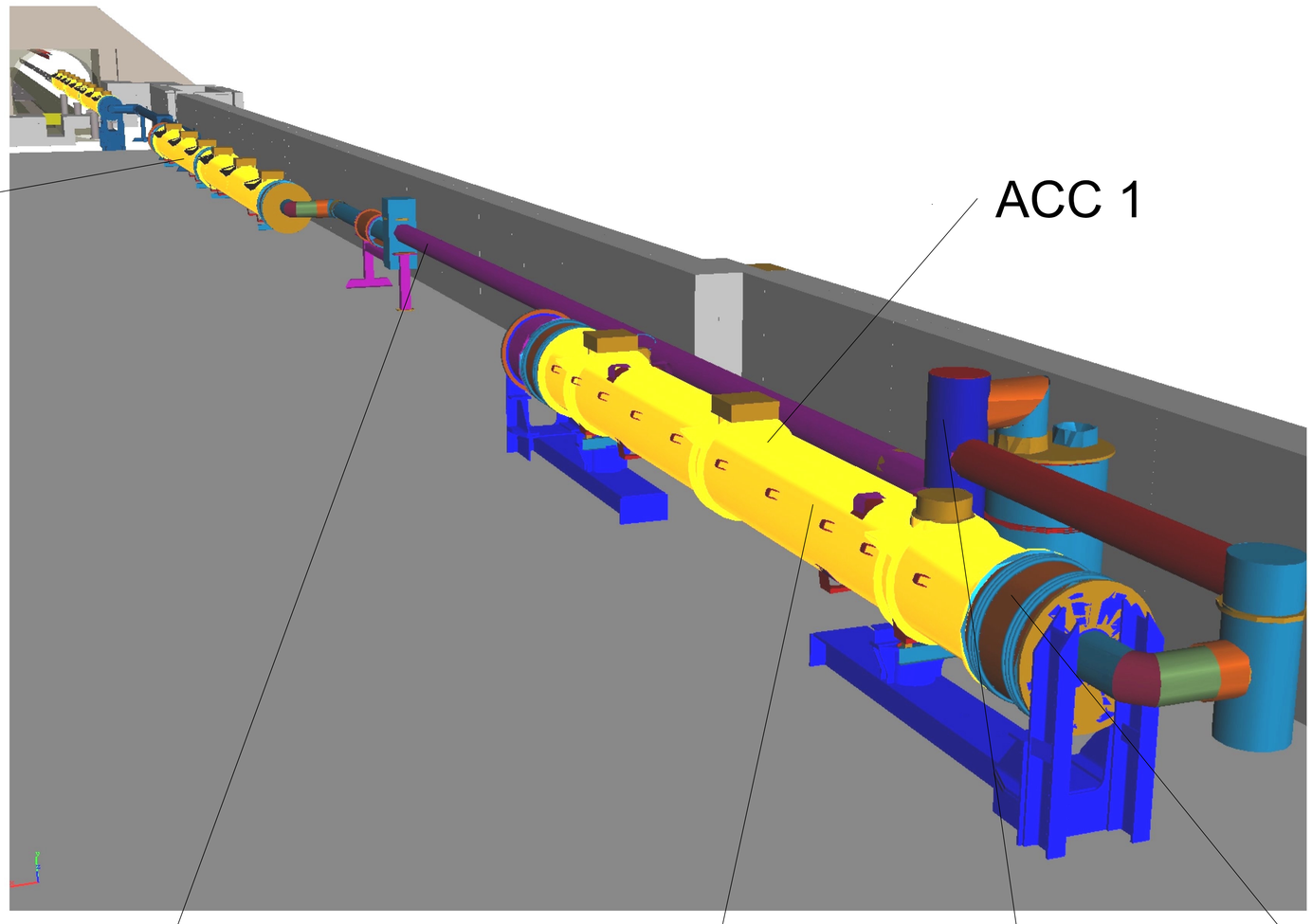

ACC 2 + 3

ACC 1

Cryogenic distribution system
for TTF phase 2

Feedcap Cryogenic Connections
(DESY MKS)

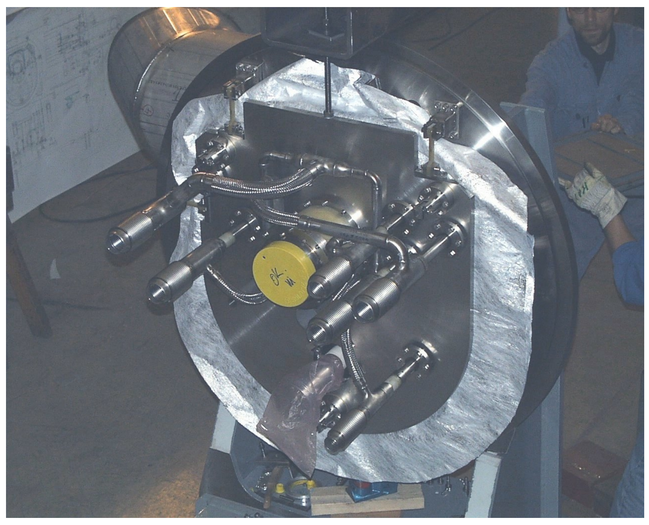

Bunchcompressor bypass transferline
(DESY MKS)

Cryocap, part of TTF1 injector
to be changed for TTF2 injector
(Institut de Physique Nucéaire – Orsay)

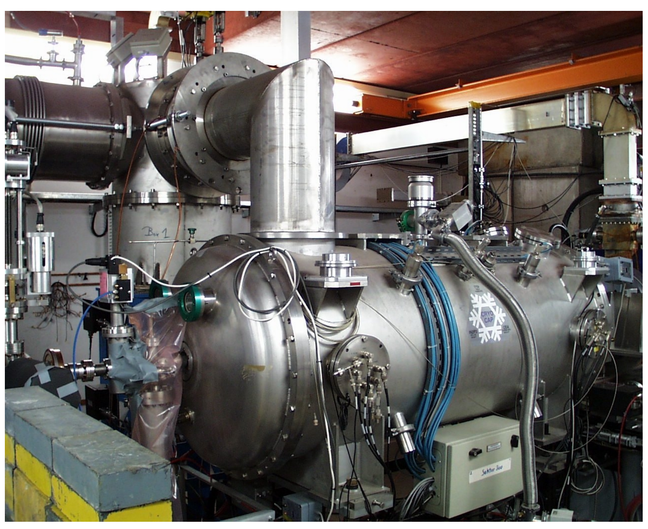
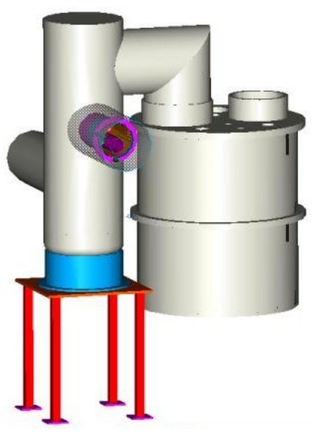
TTF Feedbox
(Fermilab)