Heating of RF Couplers mounted in Cryo - Modules

J.Hauschildt, Kai Ludwig, Bernhard Schmidt

Introduction

- **The RF couplers shall be heated to 150 °C after they are mounted to the cryo – modules to improve the cleanness by baking and thereby shorten the conditioning time and expensive klystron operation.**
- **We want to evaluate the heating of the couplers by heating wires – which stay mounted on the coupler – and remain in the thermal shield of the modules. The main part to be heated is the cold ceramic, so the heating will concentrate on this area of the coupler and will be mounted there as well.**

Power consumption for heating by 130 K

- **The coupler is thermally connected to the 4K and 70 K shield by cooper bands. They have a cross section of A = ~ 50 mm² and a length l = ~140 mm. For every coupler 4 (resp. 2) bands to the 4 K shield and 4 bands to the 70 K shield foreseen. These band may lead 16 W each at a temperature difference of 130 K.**
- **The power consumption is in equilibrium given by the heat losses in adjacent parts of the modules. The mass of the coupler is estimated to 10 kg (mainly consisting from stainless steel) is small compared to the mass of the module.**

Thermal expansion by warming for 130 K

- **12 m aluminium expands by warming of 130 K for 37 mm. Due to the fixed bearing in the centre of the module the expansion on each side is accordingly half of that. Thermal expansion was in contradiction to thermal shrinking not be taken into account when the modules where designed.**
- **The main problems are the bellows of all connections.**
- **The bellows of the pipes on the shields may allow a elongation of 5 mm, this leads to a max. temperature of 55 °C if more than 1 module is heated at a time.**

heating up time, cold window

assumption : heaters at 150 C kept constant

both connections to 77K and 4 K
shield in place (2 copper strips each)

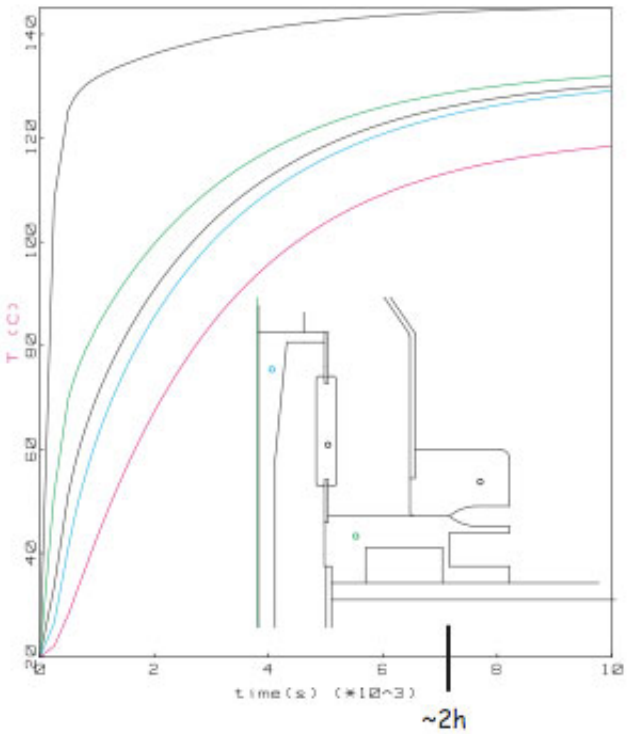

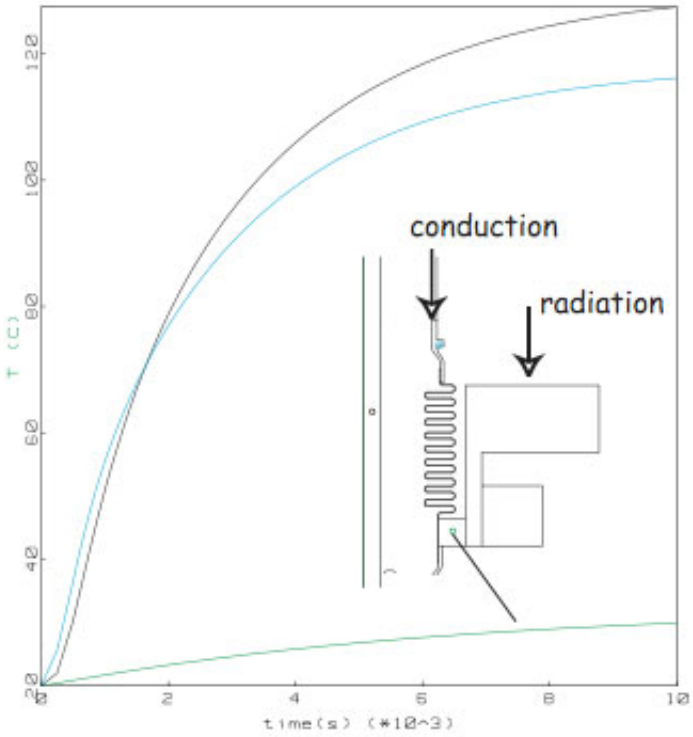

cavity connection stays "cold".

Distribution of boundaries

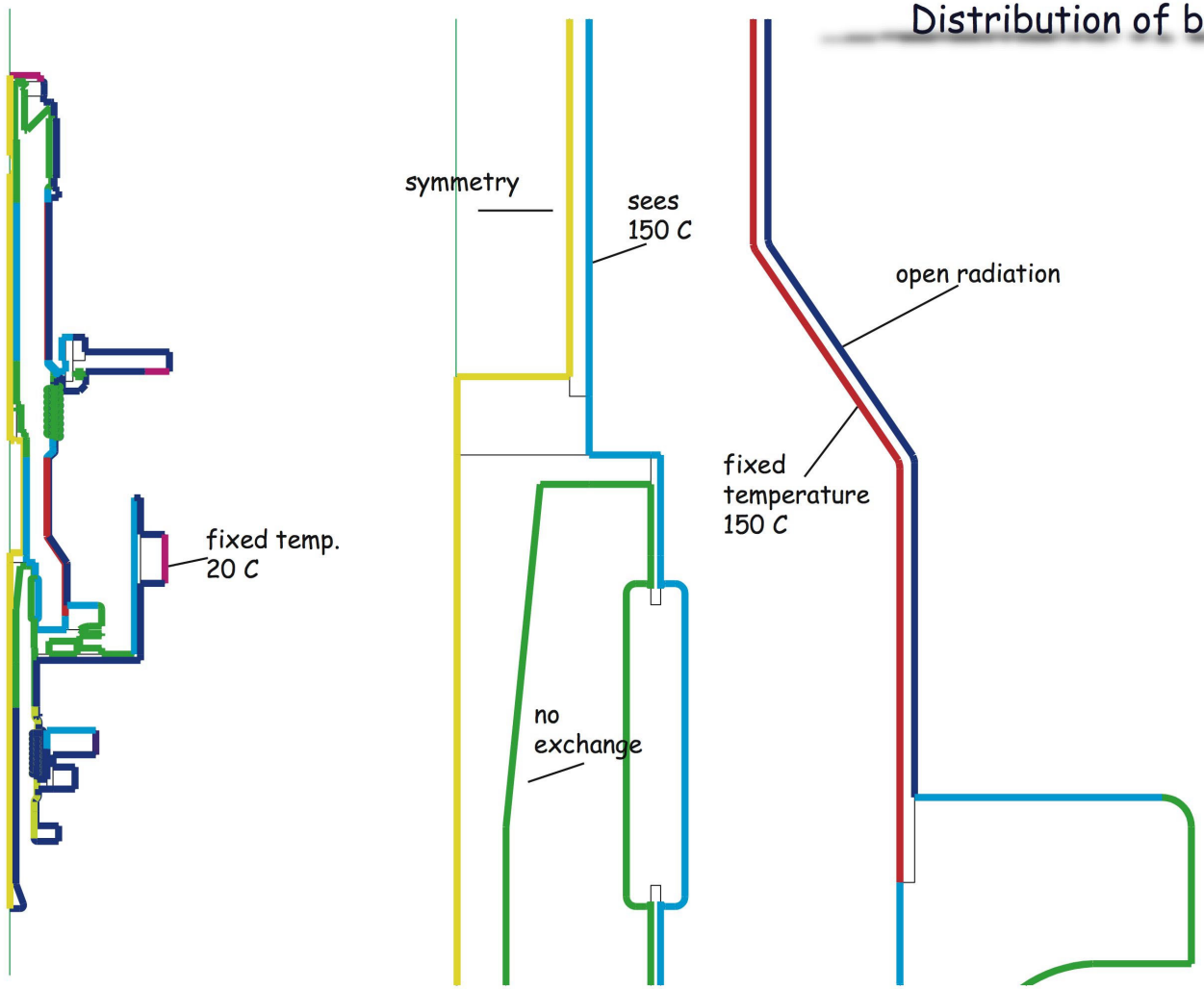

Bernhard Schmidt 24.11.03

All calculations done for axial symmetric configuration

Distribution of material

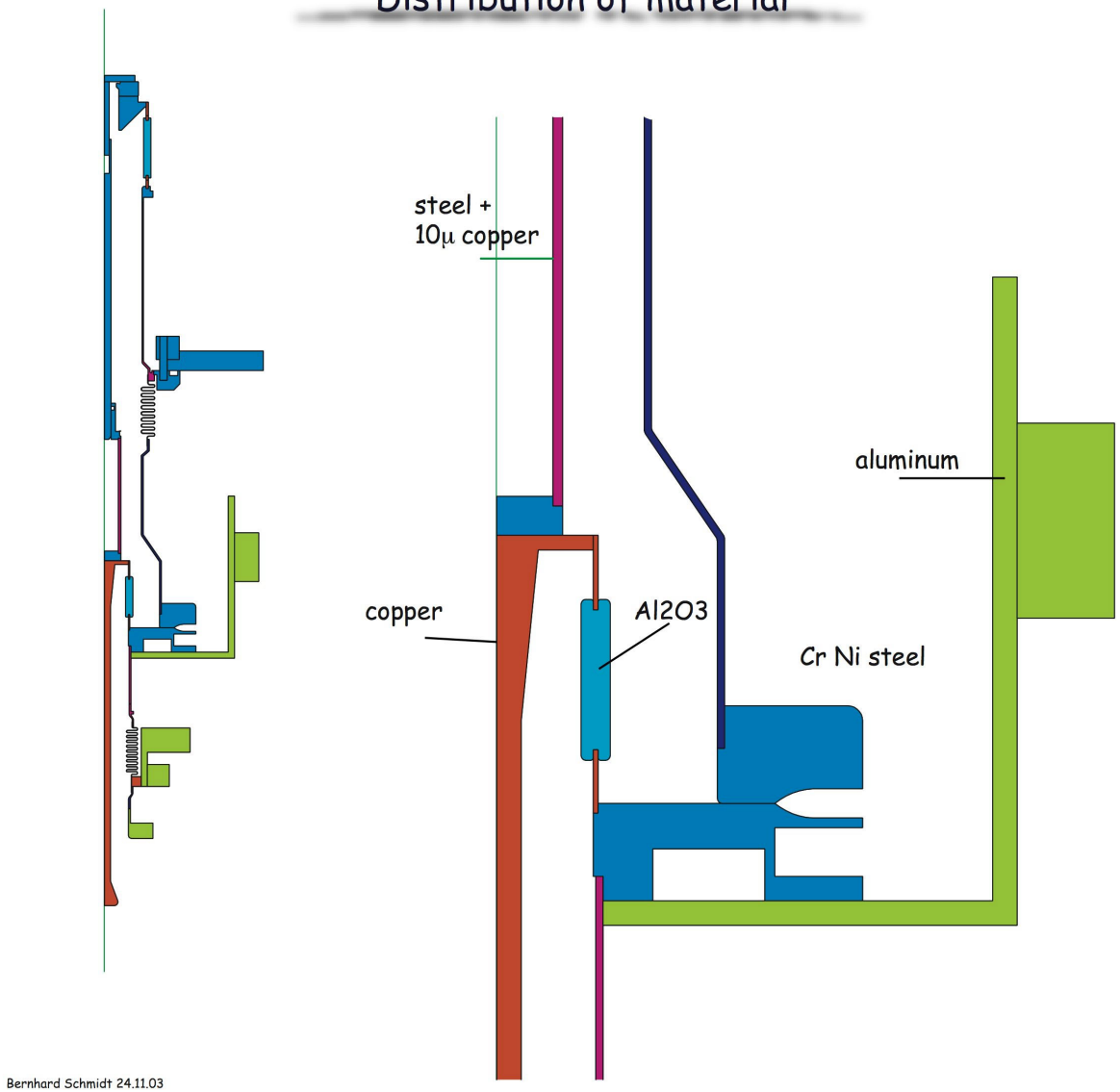

NAME	PROPERTY	ARGUMENT	VAR VALUE	UNIT
COPPER	Lambda	Const isotropic	3.800000e+02	W/m C
	Rho	Const	0.000000e+00	kg/m3
	Cp	Const	0.000000e+00	J/(kg K)
*ALUMINIUM	Lambda	Const isotropic	1.650000e+02	W/m C
	Rho	Const	2.700000e+03	kg/m3
	Cp	Const	9.000000e+02	J/(kg K)
*CrNi	Lambda	Const isotropic	1.300000e+01	W/m C
	Rho	Const	7.700000e+03	kg/m3
	Cp	Const	4.400000e+02	J/(kg K)
St01Cu	Lambda	Const isotropic	4.360000e+01	W/m C
	Rho	Const	7.700000e+03	kg/m3
	Cp	Const	4.400000e+02	J/(kg K)
*St02Cu	Lambda	Const isotropic	2.900000e+01	W/m C
	Rho	Const	7.700000e+03	kg/m3
	Cp	Const	4.400000e+02	J/(kg K)
*St025Cu	Lambda	Const isotropic	2.600000e+01	W/m C
	Rho	Const	7.700000e+03	kg/m3
	Cp	Const	4.400000e+02	J/(kg K)
*St1Cu	Lambda	Const isotropic	1.630000e+01	W/m C
	Rho	Const	7.700000e+03	kg/m3
	Cp	Const	4.400000e+02	J/(kg K)
*St2Cu	Lambda	Const isotropic	1.470000e+01	W/m C
	Rho	Const	7.700000e+03	kg/m3
	Cp	Const	4.400000e+02	J/(kg K)
*Al2O3	Lambda	Const isotropic	3.000000e+01	W/m C
	Rho	Const	3.900000e+03	kg/m3
	Cp	Const	9.000000e+02	J/(kg K)
St015Cu	Lambda	Const isotropic	3.700000e+01	W/m C
	Rho	Const	7.700000e+03	kg/m3
	Cp	Const	4.400000e+02	J/(kg K)

heating up time, cold window

assumption : heaters at 150 C kept constant

both connections to 77K and 4 K
shield in place (2 copper strips each)

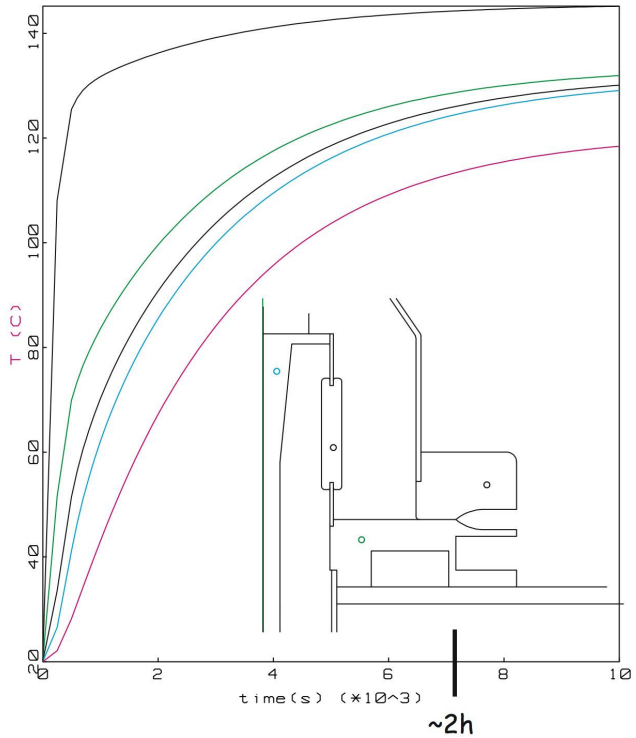

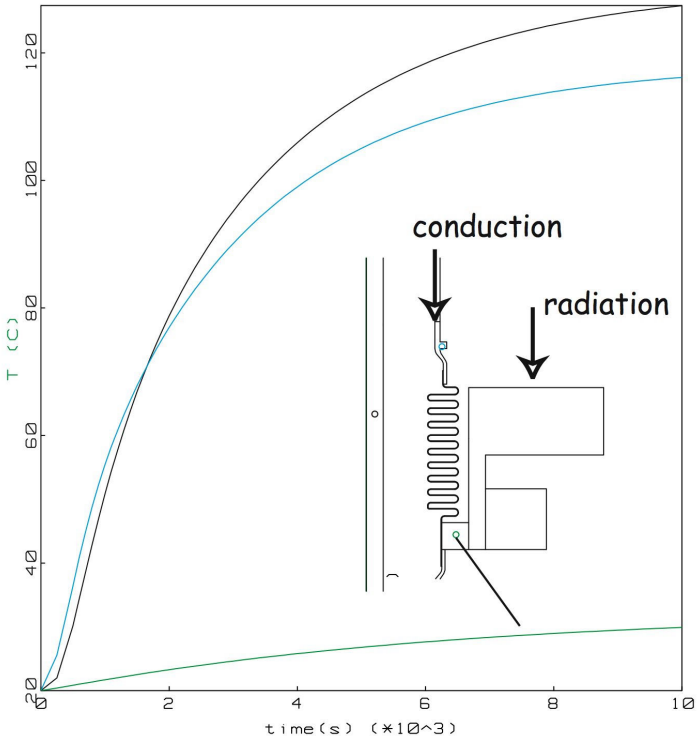

cavity connection stays "cold".

Equilibrium temperature distribution

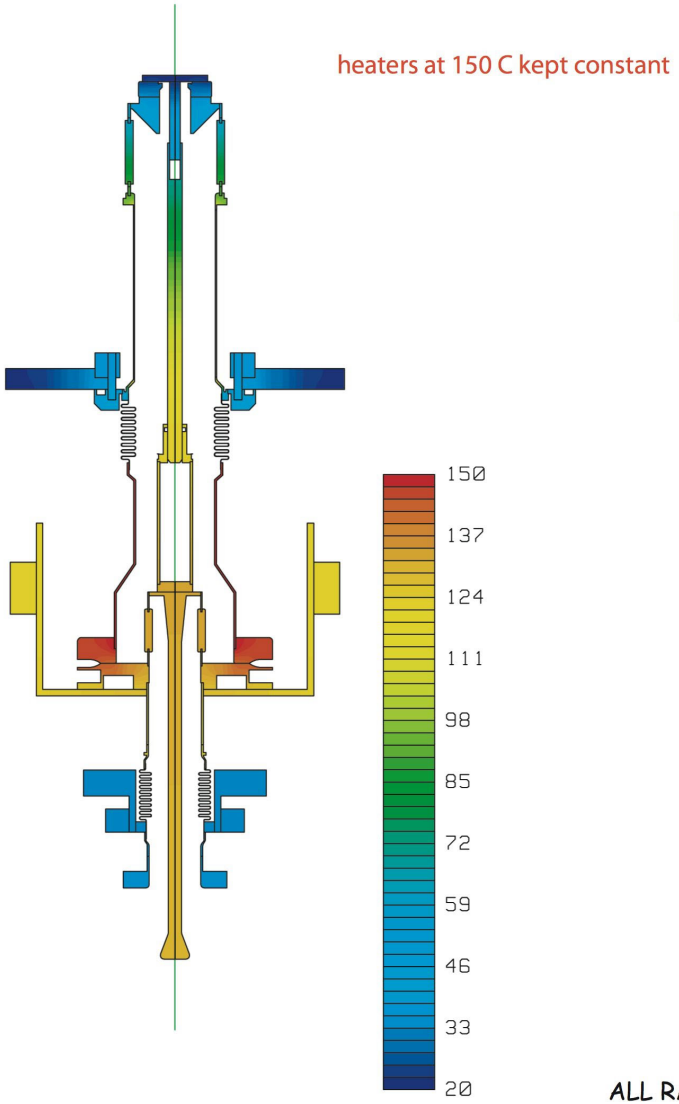

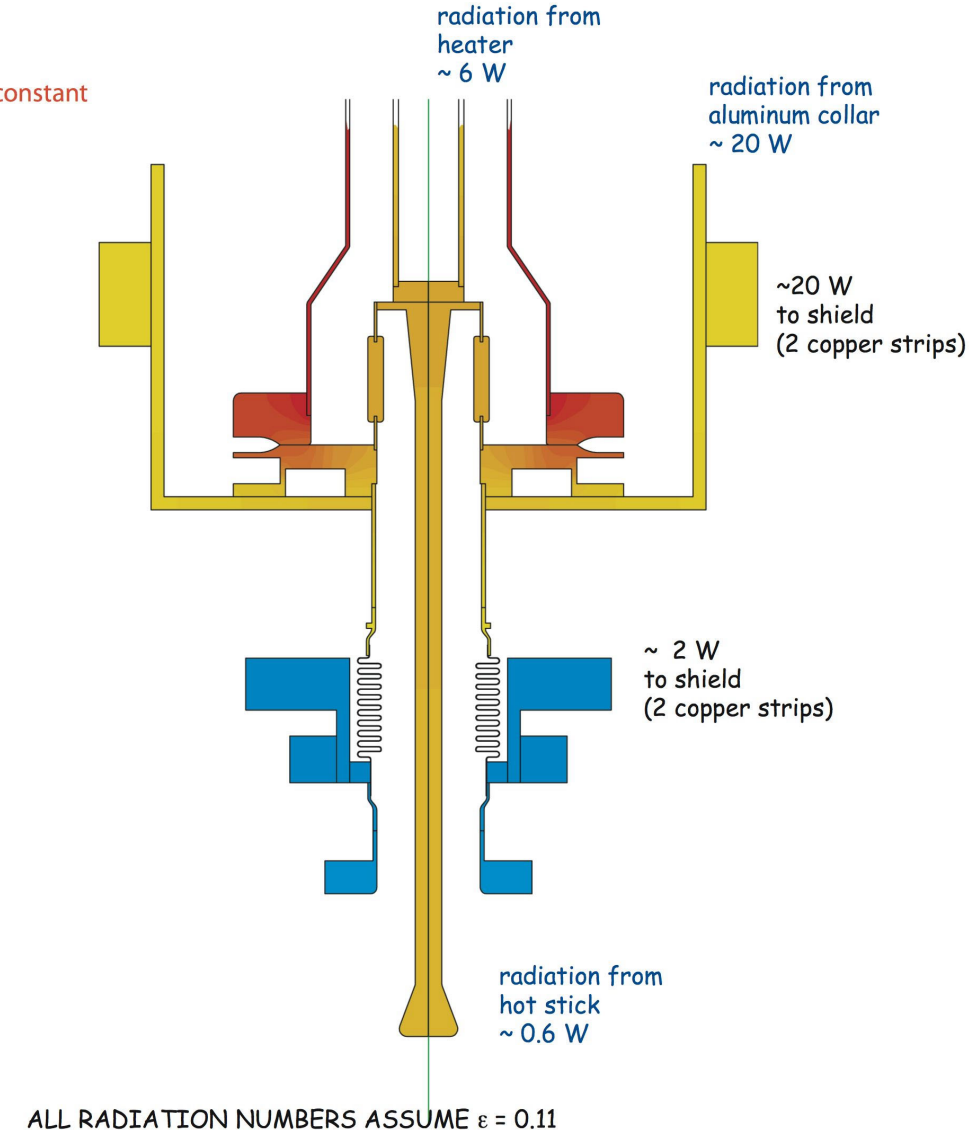

ALL RADIATION NUMBERS ASSUME $\varepsilon = 0.11$

coupled to 77K shield
(2 copper pigtails)

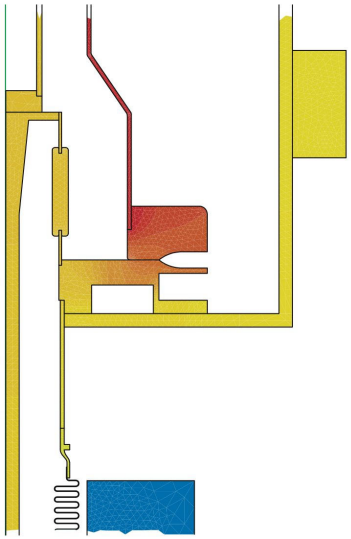

20 W cond.
+ 20 W rad.

40 W to shield

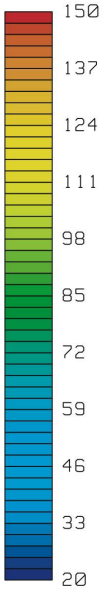

NOT coupled to 77K shield
aluminum collar free

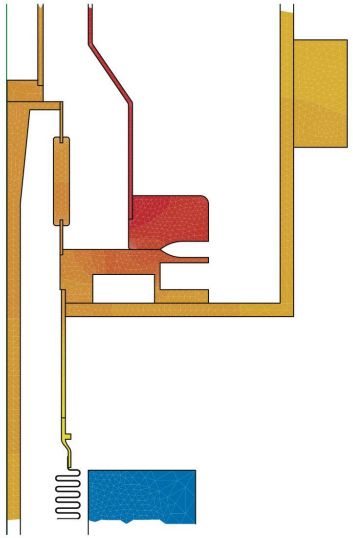

20 W rad.

to shield

NOT coupled to 77K shield
aluminum collar rad. suppr.
(factor 5)

arbitrary!

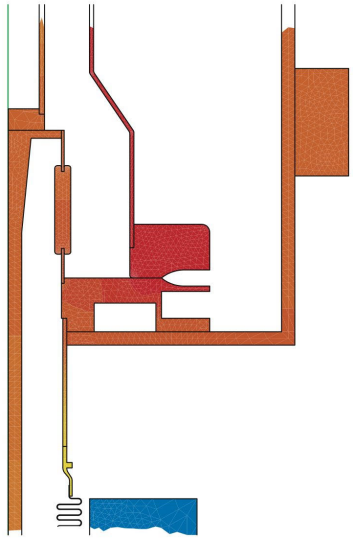

4 W rad.

to shield

- all plots assuming heater at 150 C kept constant -

Switching off the thermal coupling from coupler to shields

- **By installing thermal switches in the copper bands to the 70 K shield the heat conduction from couplers to the shield would become very small.**
- **These switches close spring loaded and open by applying gas pressure.**
- **Band to the 4 K shield stay connected to prevent heat transmission into the cavities.**
- **Mainly by radiation heat would flow to other components inside the module. First simulations show a heat radiation of abt. 20 W per coupler.**

Thermal Switch

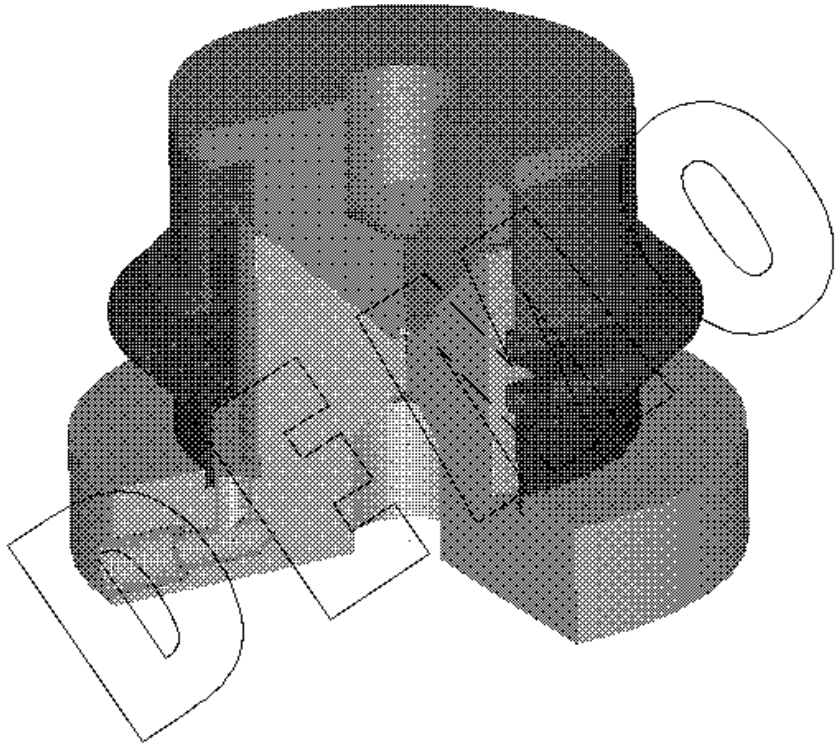

Material problems

- **Material problems may arise at 150 °C at**

- **rubber sealings of isolating vacuum – stay colder**
- **aluminium sealing at the cold side of the coupler - stay colder**
- **tapes of cable fixations –smaller problems**
- **cable isolations**
- **soldering points**

Local Overheating and Cool Back

- **There has to be assured a good conductivity from the heat wires to the coupler to prevent local overheating. Intensive and continuous temperature monitoring has to take place.**
- **After baking a controlled cool back of the modules has to be foreseen as the heat losses are not big enough.**

Changes to the Modules

- **Additional temperature sensors, heating wires, supply and readout cables**
- **Additional piping for the thermal swiches**
- **Feedthroughs**
- **Supply and controll hard- and software**

Steps to the Baking

- **Tests with thermal switches in warm and cold condition**
- **Further Simulations**
- **Engineering work on heating and isolation**
- **Practical tests in modules or in CEHCHIA**

Addendum after the workshop

Heating with constant power at the 77K flange

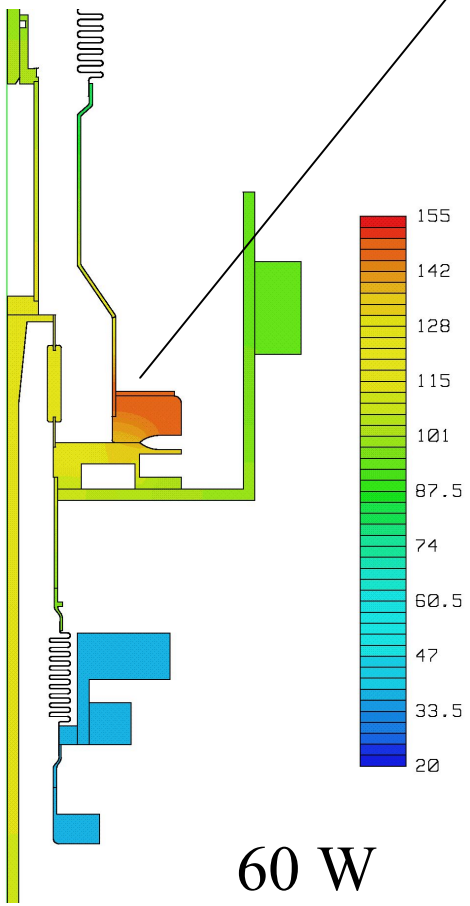

60 W
connected to shield

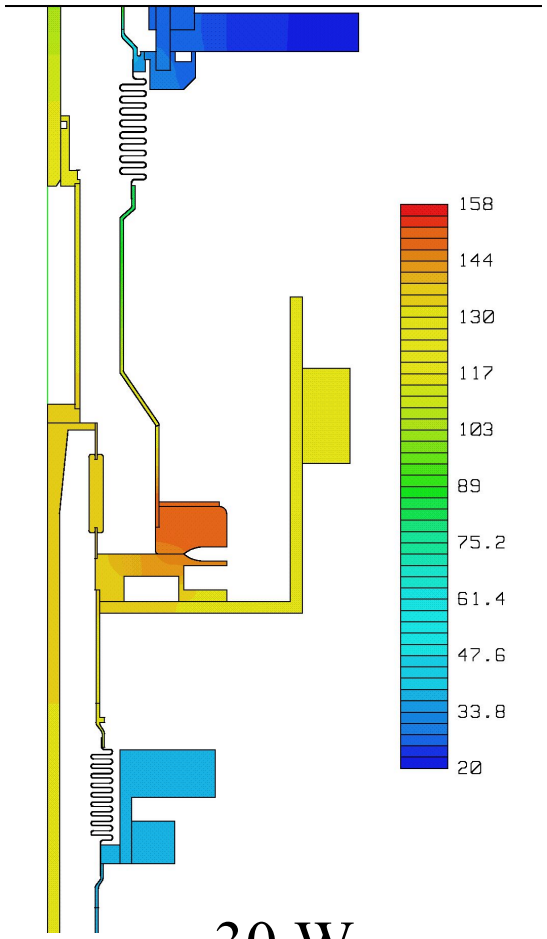

30 W
heat switch open
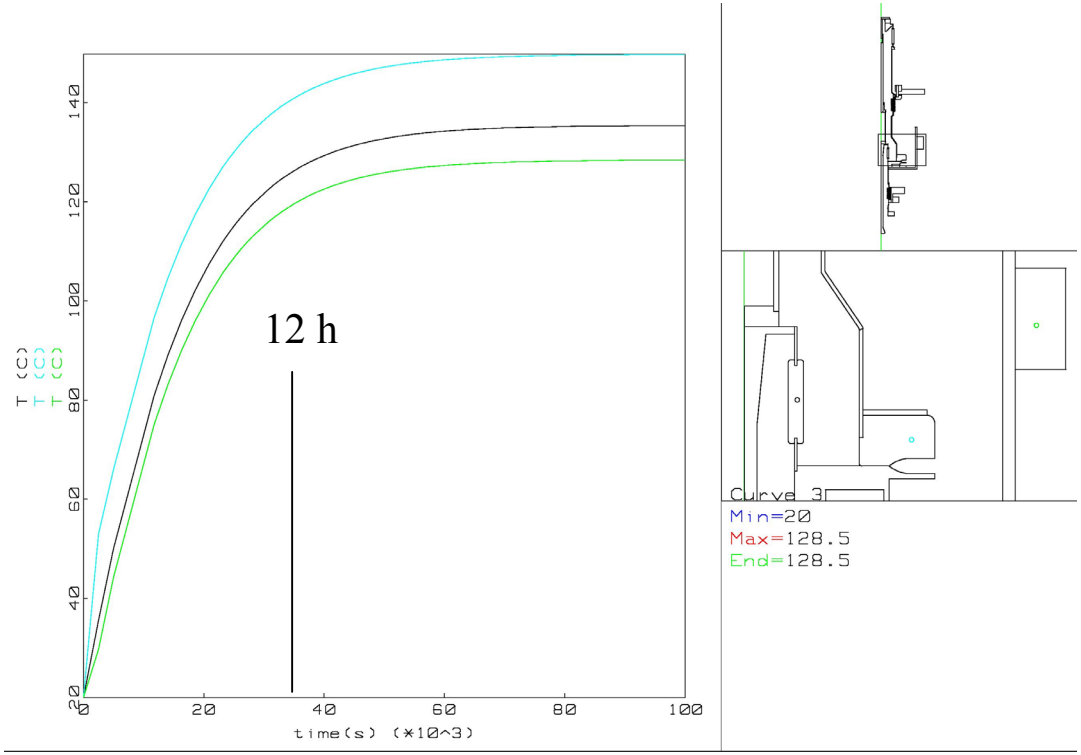
Heating time with constant power 30 W, heat switch open