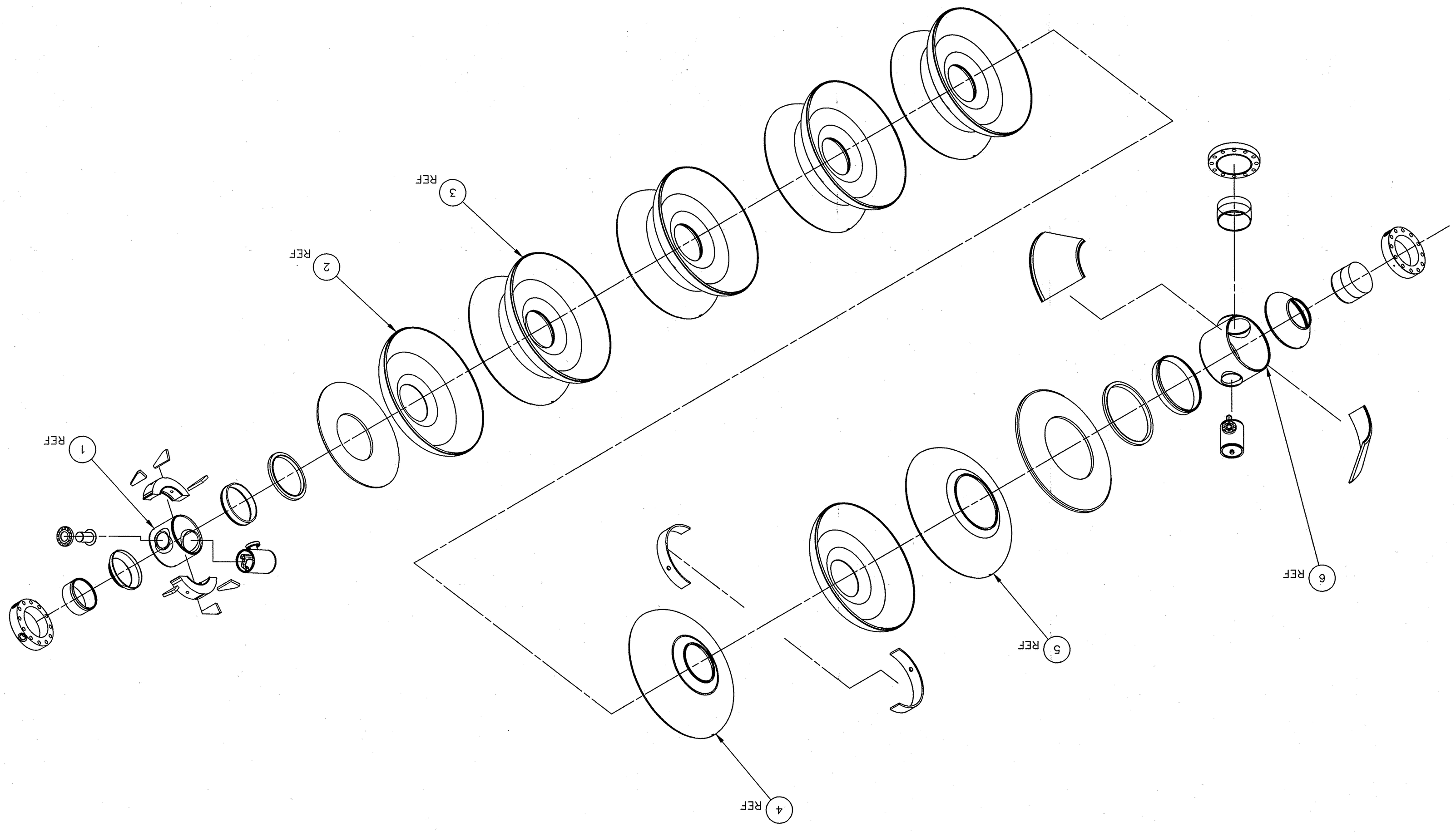

SIZE	DWG. NO.	REV.
D	CRM9007010-0002	B

SCALE 1:5 | USED ON ASSY NO. CRM9007020-0003 | SHEET 2 OF 2

DWG. NO. CRM9007010-0002 | SHT. 2 | REV. B