DWG. NO.	SHT.	REV.
CRM9007010-0002	1	B

REVISION HISTORY

ZONE	REV	DESCRIPTION	DATE	APPROVED
ALL	A	UPDATED GRAPHICS. ADDED POSITIONAL TOLERANCES. GRB 10JUL01	7-11-01 D.M. 7-12-01	7-11-01 P.K. M.W.
A-3 B-5	B	UPDATED ITEM 1. ADDED ITEMS 11 &12.ADDED TOLERANCE TO DIMENSIONS. RG 08NOV01	11-26-01 DM 12-10-01 RGR	12-10-01 PK

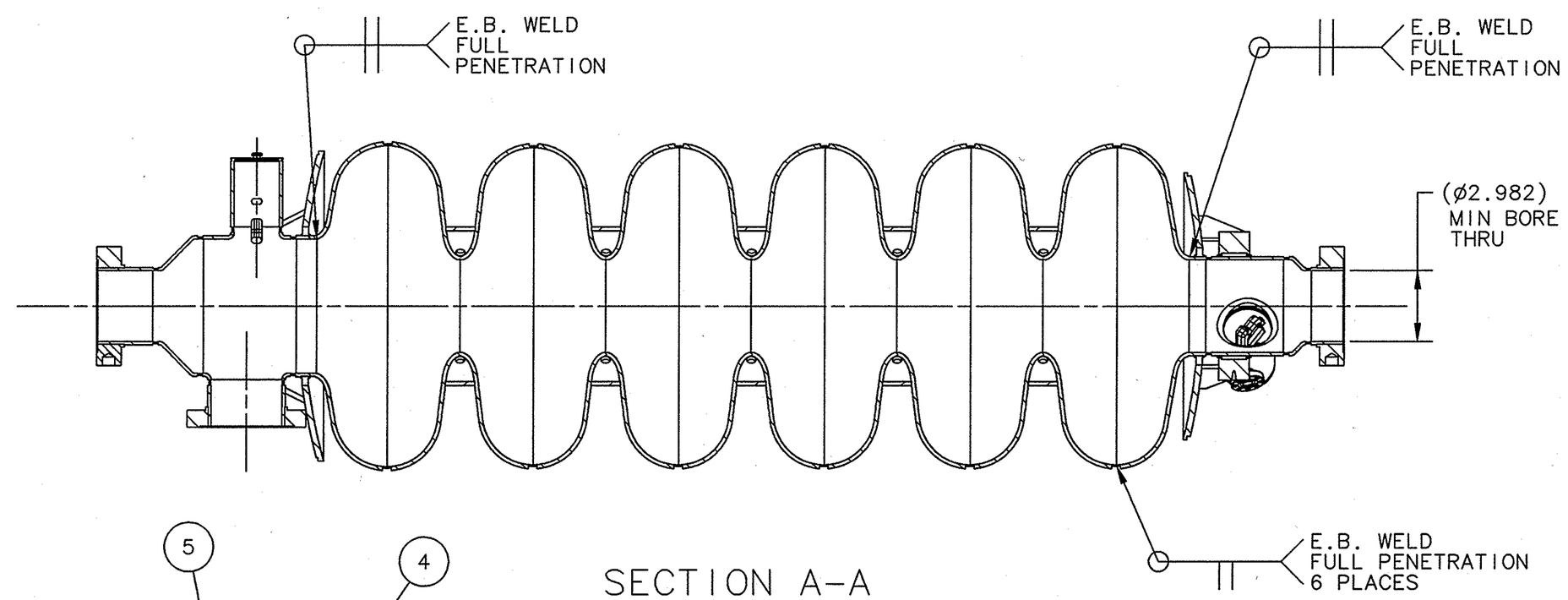

SECTION A-A

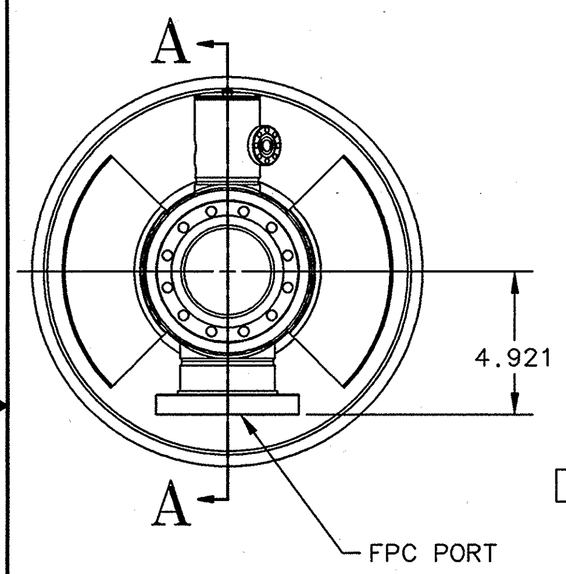

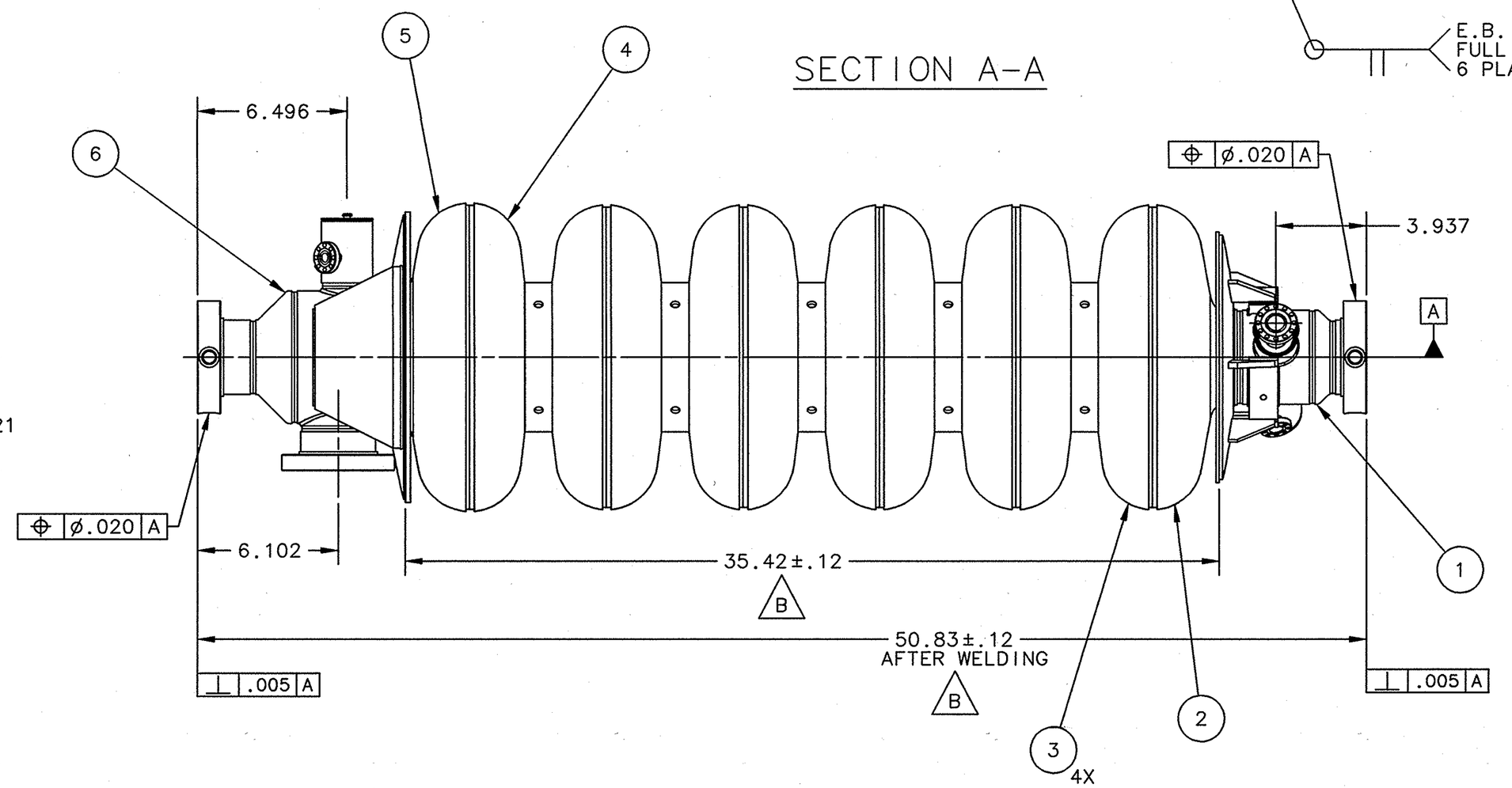

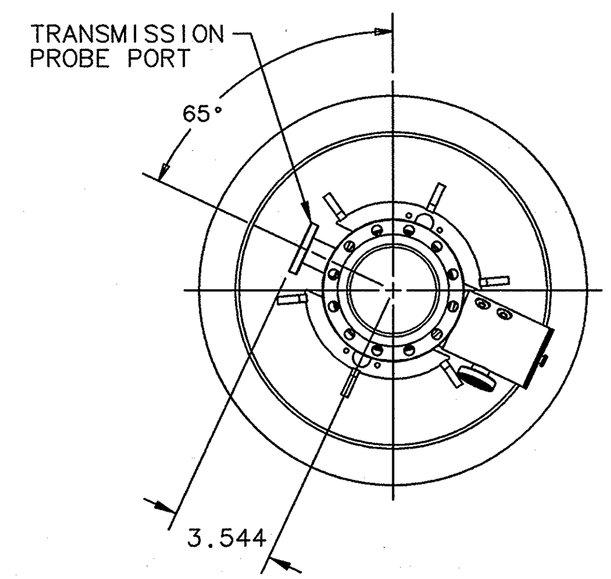

NOTES:

1. FABRICATE PER STATEMENT OF WORK-SNS CAVITY PROCUREMENT FOR 0.81 BETA CAVITY CRM9000000-1007.
2. PROTECT FLANGE FACES DURING PROCESSING.
3. WELD JOINTS ARE DESIGNED FOR .010 INCH SHRINKAGE. ADJUST IF NECESSARY.

QTY REQD	ITEM NO.	PART OR IDENTIFYING NO.	NOMENCLATURE OR DESCRIPTION	MATERIAL SPECIFICATION	NOTES
B 1	12	CRM9007010-1076	HOM FLANGE SEAL		NOT SHOWN
B 1	11	CRM9007010-1075	HOM BLANK FLANGE		NOT SHOWN
1	10	CRM9007010-1053	PROBE FLANGE SEAL		NOT SHOWN
1	9	CRM9007010-1056	PROBE BLANK FLANGE		NOT SHOWN
3	8	CRM9007010-1051	BEAM TUBE/FPC FLANGE SEAL		NOT SHOWN
3	7	CRM9007010-1054	BEAM TUBE/FPC BLANK FLANGE		NOT SHOWN
1	6	CRM9007010-3037	FPC END SUBASSY		
1	5	CRM9007010-3008	FPC END CELL (M/F MACH)		
1	4	CRM9007010-3011	CENTER-FPC INNER CELL ASSY		
4	3	CRM9007010-3009	CENTER CELL SUBASSY		
1	2	CRM9007010-3004	PROBE END CELL (F-F MACHINE)		
B 1	1	CRM9007010-3036	PROBE END SUBASSY		

DIM & TOL PER ANSI Y14.5
UNLESS OTHERWISE SPECIFIED
DIMENSIONS ARE IN INCHES
TOLERANCES ARE:
FRACTIONS ± N/A DECIMAL .XX ±.01 .XXX ±.005 ANGLES ±.50°

MATERIAL: SEE PARTS LIST

FINISH 125 UNLESS OTHERWISE NOTED
DEBURR & BREAK ALL SHARP EDGES

DO NOT SCALE DRAWING

CADD I.D. NO.: I-DEAS
SNS DRAWING NO. 101111000-M8D-8200-A095-R00

APPROVALS		DATE
DRAWN	R. GETZ	15FEB01
CHECKED	D. MACHIE	2/27/01
APPROVED	P. KNEISEL	2/27/01
APPROVED	W. SCHNEIDER	2/27/01

Jefferson Lab
Thomas Jefferson National Accelerator Facility
NEWPORT NEWS, VIRGINIA
UNITED STATES DEPARTMENT OF ENERGY

SPALLATION NEUTRON SOURCE
0.81 (HIGH) BETA CRYOMODULE
CAVITY
TOP ASSEMBLY

SIZE D | DWG. NO. CRM9007010-0002 | REV. B

SCALE 1:4 | USED ON ASSY NO. CRM9007020-0003 | SHEET 1 OF 2