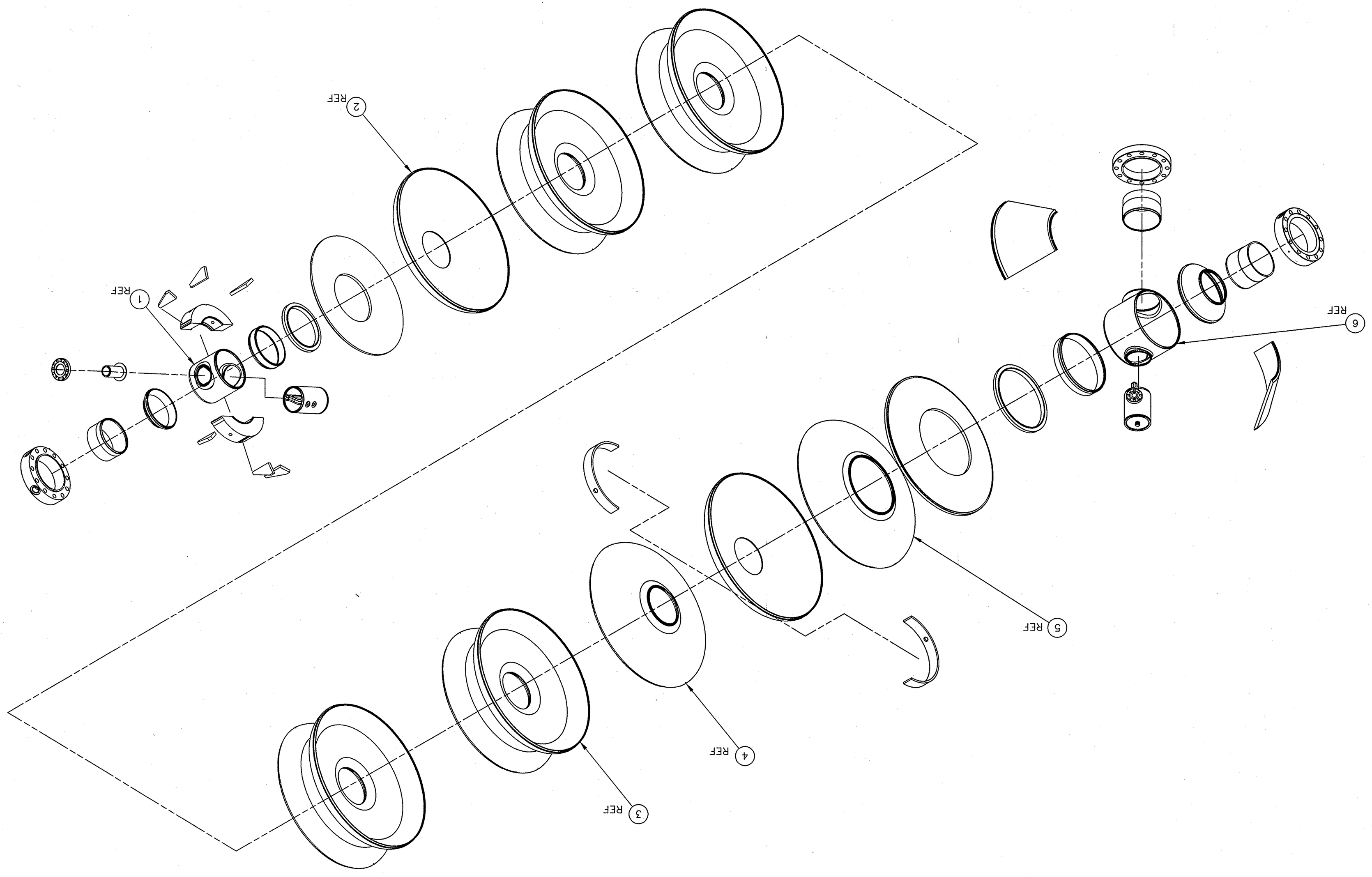

SIZE	DWG. NO.	REV.
D	CRM9007010-0001	C

SCALE 1 : 4 | USED ON ASSY NO. CRM9007020-0002 | SHEET 2 OF 2

DWG. NO. CRM9007010-0001 | SHT. 2 | REV. C