DWG. NO.	SHT.	REV.
CRM9007010-0001	1	C

REVISION HISTORY

ZONE	REV	DESCRIPTION	DATE	APPROVED
ALL	A	GRAPHIC CHANGES RG 24FEB01	2/27/01 D.M. 2/27/01	2/27/01 P.K. W.S.
ALL	B	UPDATED GRAPHICS. ADDED POSITIONAL TOLERANCES. GRB 09JUL01	7-11-01 D.M. 7-12-01	7-11-01 P.K. M.W.
B-5	C	UPDATED ITEMS 1 & 6. ADDED TOLERANCE TO OVERALL DIMENSIONS. ADDED ITEMS 11 & 12. RG 15NOV01	11-26-01 D.M. 12-10-01	12-19-01 P.K. 12-10-01

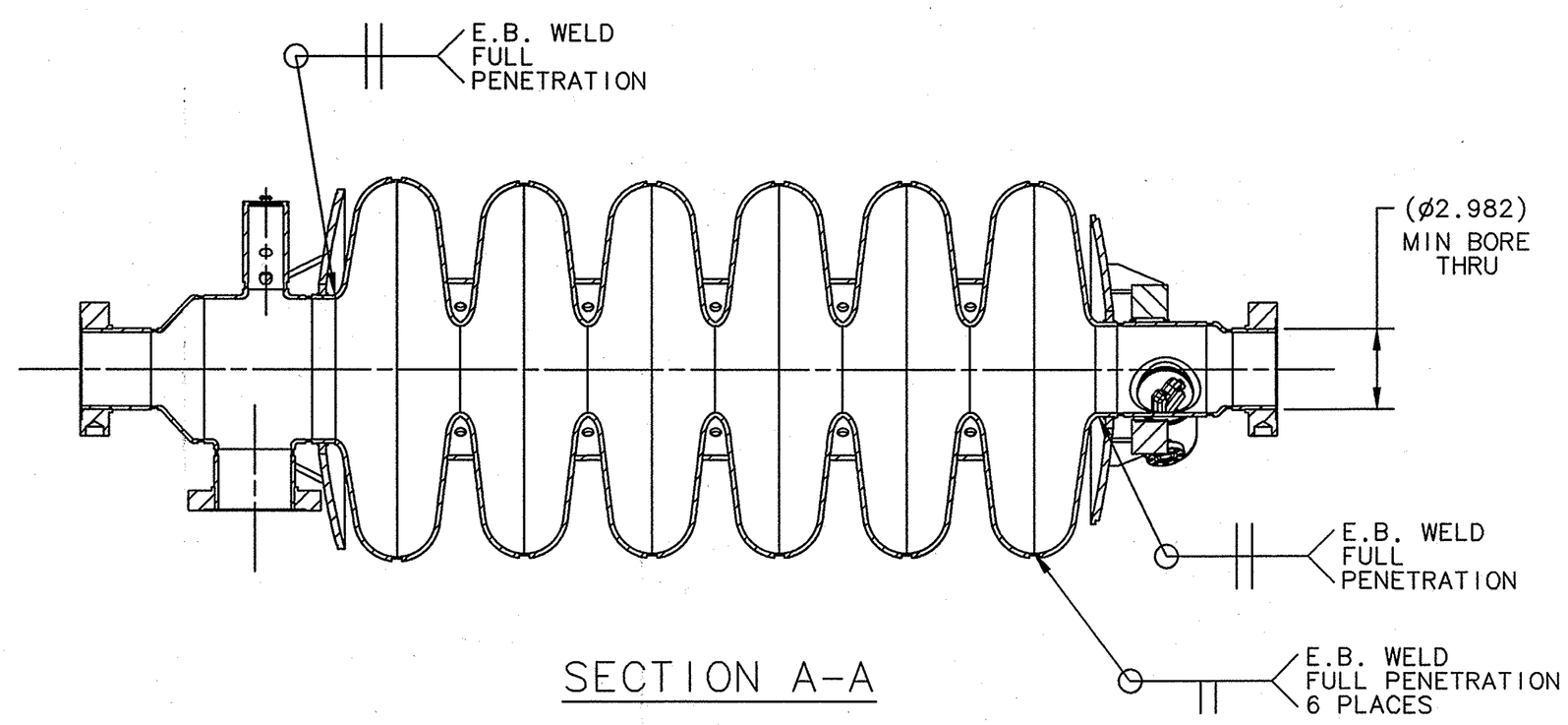

SECTION A-A

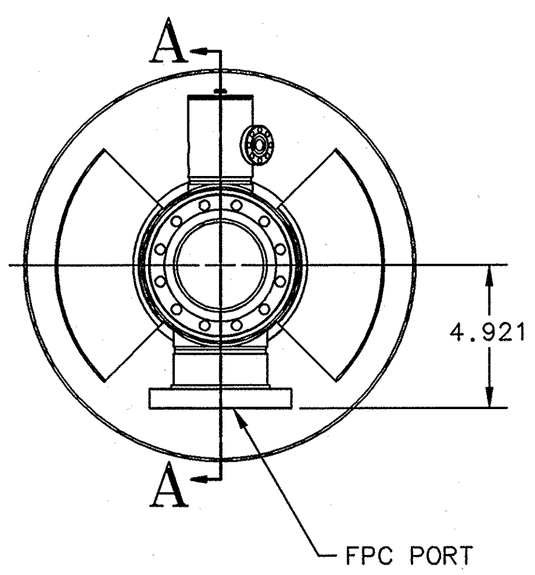

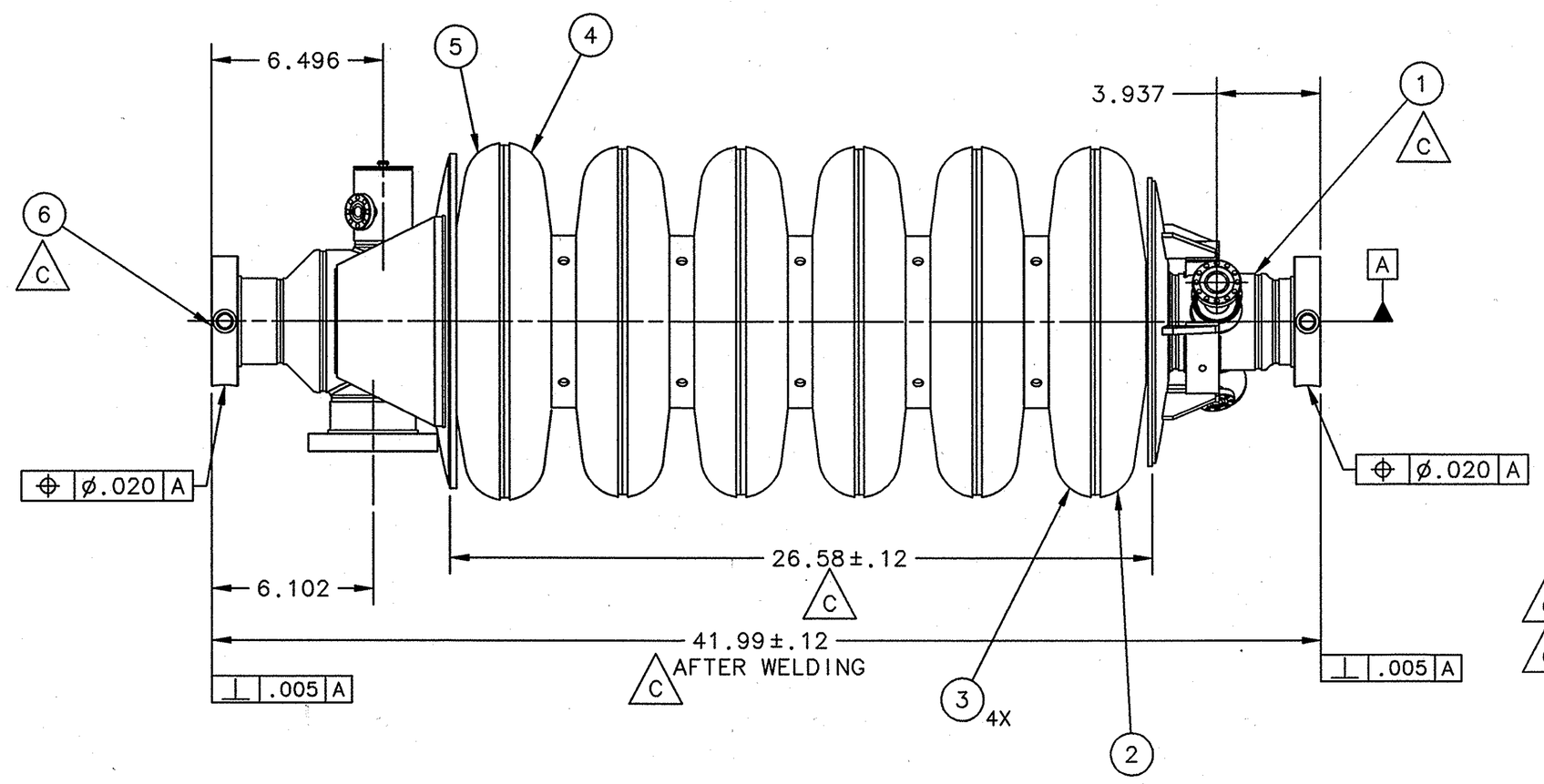

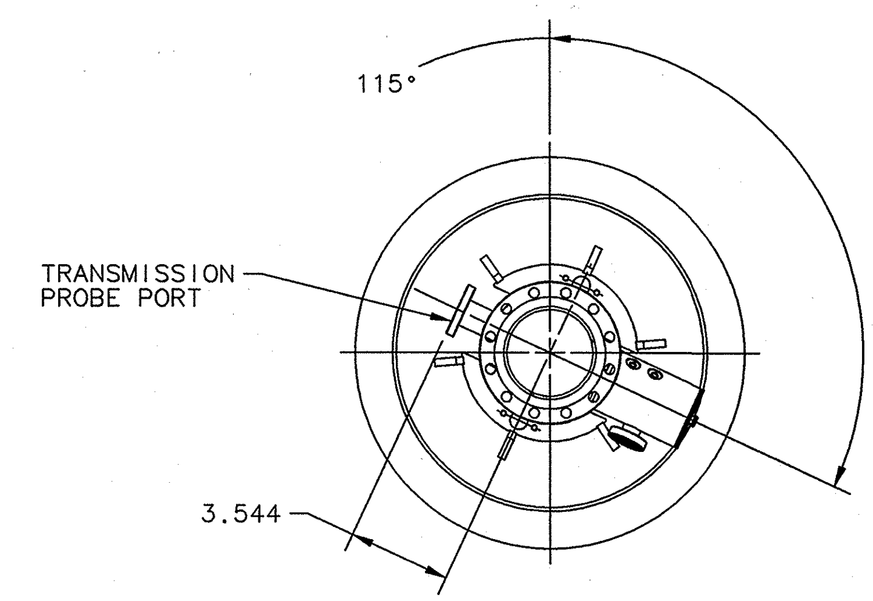

QTY REQD	ITEM NO.	PART OR IDENTIFYING NO.	NOMENCLATURE OR DESCRIPTION	MATERIAL SPECIFICATION	NOTES
1	12	CRM9007010-1076	HOM FLANGE SEAL		NOT SHOWN
1	11	CRM9007010-1075	HOM BLANK FLANGE		NOT SHOWN
1	10	CRM9007010-1053	PROBE FLANGE SEAL		NOT SHOWN
1	9	CRM9007010-1056	PROBE BLANK FLANGE		NOT SHOWN
3	8	CRM9007010-1051	BEAM TUBE/FPC FLANGE SEAL		NOT SHOWN
3	7	CRM9007010-1054	BEAM TUBE/FPC BLANK FLANGE		NOT SHOWN
1	6	CRM9007010-1043	FPC END SUBASSY		
1	5	CRM9007010-1008	FPC END CELL (M/F MACH)		
1	4	CRM9007010-1026	CENTER-FPC INNER CELL ASSY		
4	3	CRM9007010-1027	CENTER CELL SUBASSY		
1	2	CRM9007010-1015	PROBE END CELL (F-F MACH)		
1	1	CRM9007010-1042	PROBE END SUBASSY		

NOTES:

1. FABRICATE PER STATEMENT OF WORK-SNS CAVITY PROCUREMENT FOR 0.61 BETA CAVITY CRM9000000-1006
2. PROTECT FLANGE FACES DURING PROCESSING.
3. WELD JOINTS ARE DESIGNED FOR .010" SHRINKAGE. ADJUST IF NECESSARY.

DIM & TOL PER ANSI Y14.5. UNLESS OTHERWISE SPECIFIED DIMENSIONS ARE IN INCHES TOLERANCES ARE:
FRACTIONS ±N/A DECIMAL .XX ±.01 .XXX ±.005 ANGLES ±.50°

MATERIAL: SEE PARTS LIST

FINISH 125 UNLESS OTHERWISE NOTED
DEBURR & BREAK ALL SHARP EDGES

DO NOT SCALE DRAWING

CADD I.D. NO.: I-DEAS
SNS DRW NO. 101111000-M8D-8200-A002-R00

APPROVALS	DATE
DRAWN R. GETZ	30JUL00
CHECKED D. MACHIE	1-11-01
APPROVED W. SCHNEIDER	1/12/01
APPROVED P.KNEISEL	1/12/01

Jefferson Lab
Thomas Jefferson National Accelerator Facility
NEWPORT NEWS, VIRGINIA
UNITED STATES DEPARTMENT OF ENERGY

SPALLATION NEUTRON SOURCE
0.61 BETA CRYOMODULE
CAVITY
TOP ASSEMBLY

SIZE D | DWG. NO. CRM9007010-0001 | REV. C
SCALE 1:4 | USED ON ASSY NO. CRM9007020-0002 | SHEET 1 OF 2